FAIREY FIREFLY. V.

10cc. ⅛ SCALE.

CAP WHIGH ST
EARLSTON
BERWICKSHIRE

DESIGNED & DRAWN BY
A RICHARDSON.
B YEARDLEY.

1-2 74

SHEET 1 OF 2

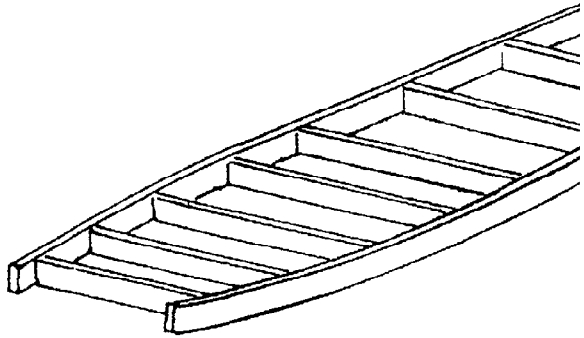

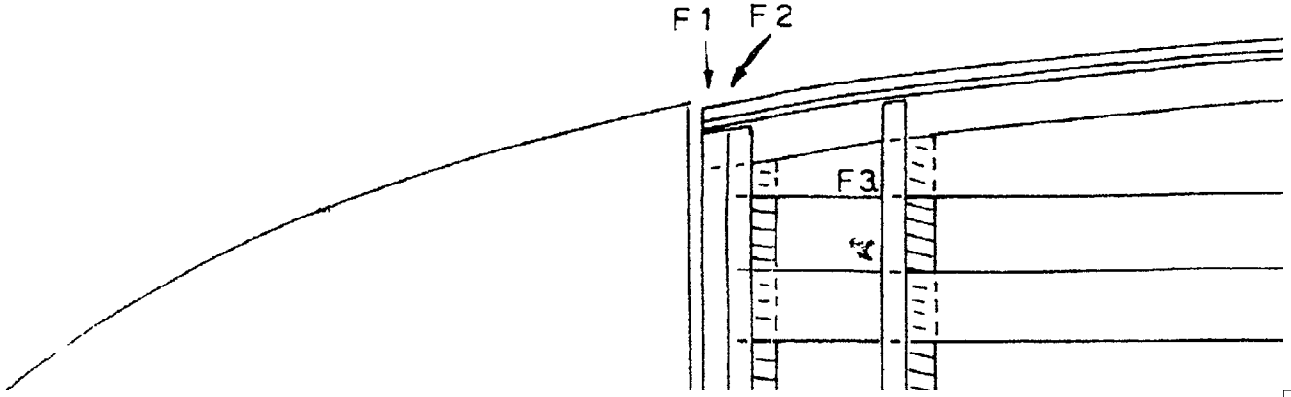

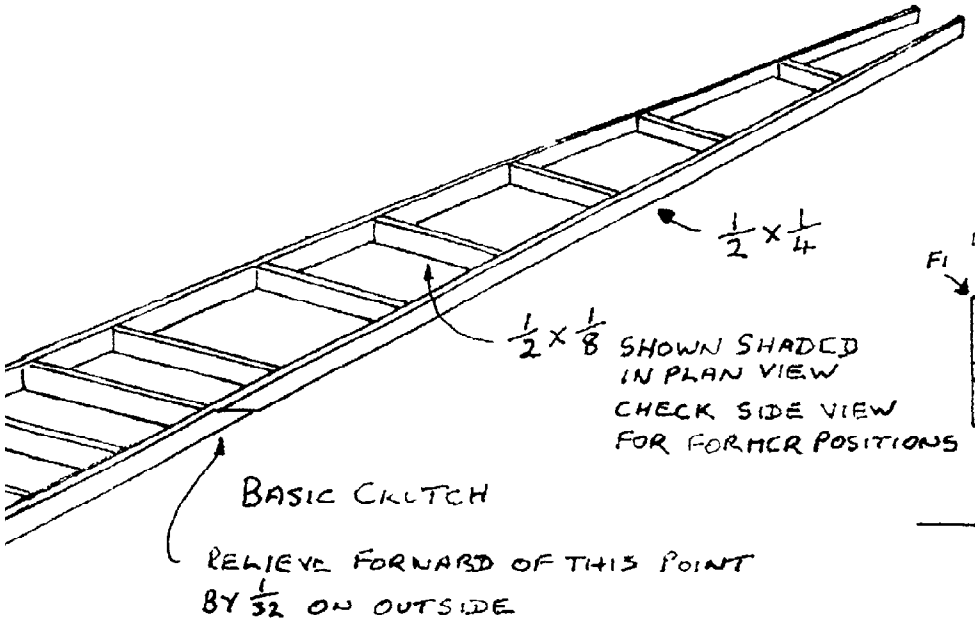
1/2 x 1/4
1/2 x 1/8 SHOWN SHADED IN PLAN VIEW
CHECK SIDE VIEW FOR FORMER POSITIONS
BASIC CRUTCH
RELIEVE FORWARD OF THIS POINT BY 1/32 ON OUTSIDE

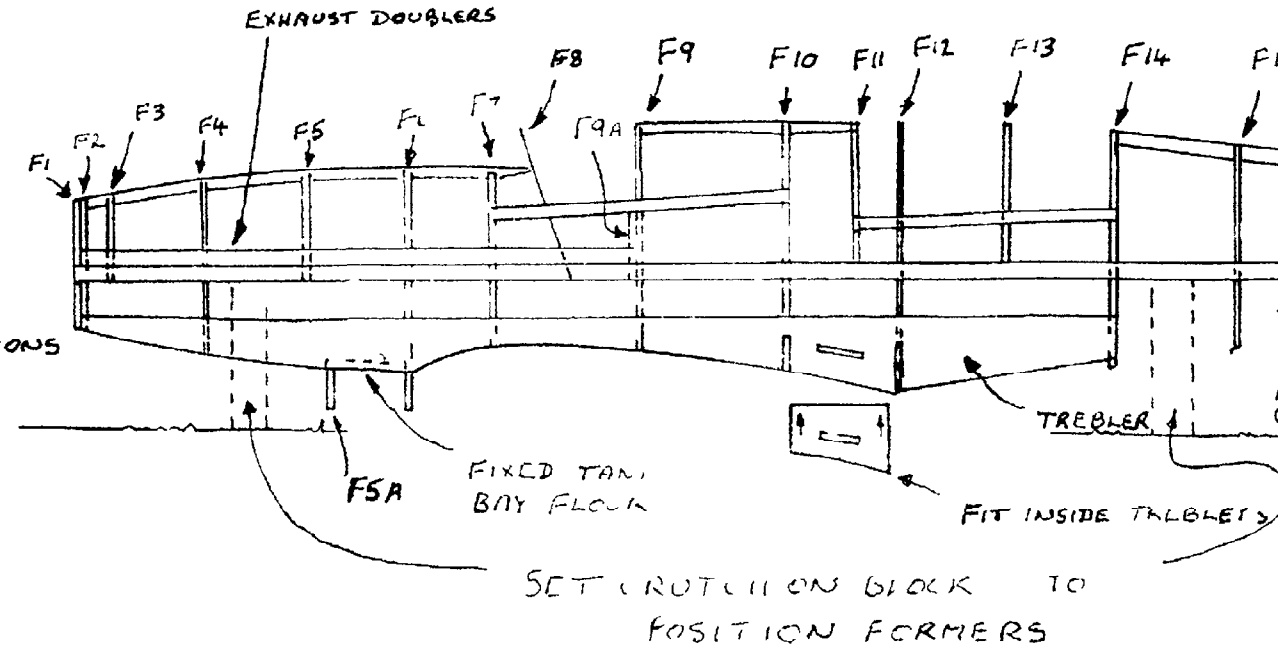
EXHAUST DOUBLERS
F1
F2
F3
F4
F5
F6
F7
F8
F9A
F9
F10
F11
F12
F13
F14
F5A
FIXED TANK BAY FLOOR
TREBLER
FIT INSIDE TREBLER
SET CRUTCH ON BLOCK TO POSITION FORMERS

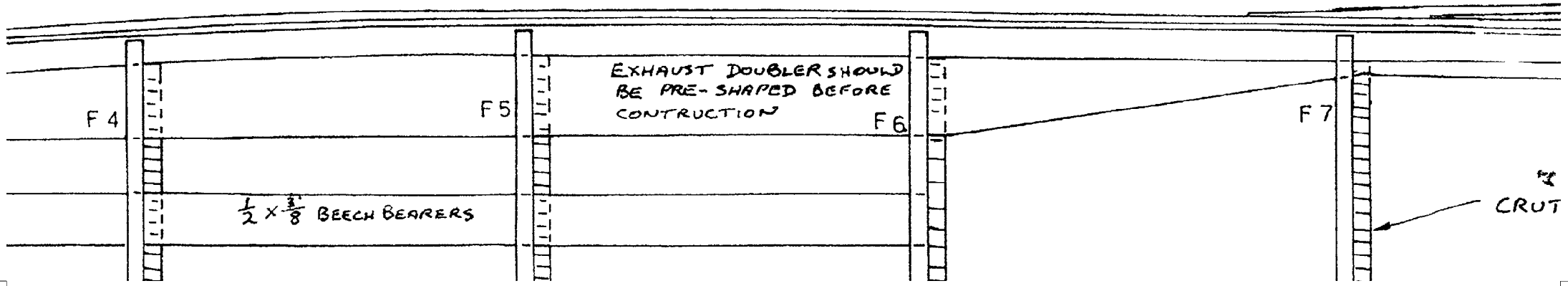
F 4
F 5
F 6
F 7
EXHAUST DOUBLER SHOULD BE PRE-SHAPED BEFORE CONTRUCTION
1/2 x 3/8 BEECH BEARERS
CRUT

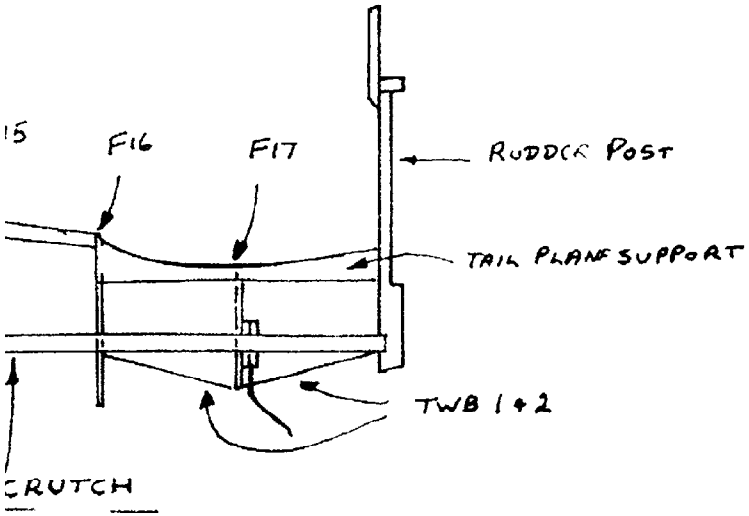

FOR COLOUR SCHEME SEE 'MAY 1973' ISSUE OF S

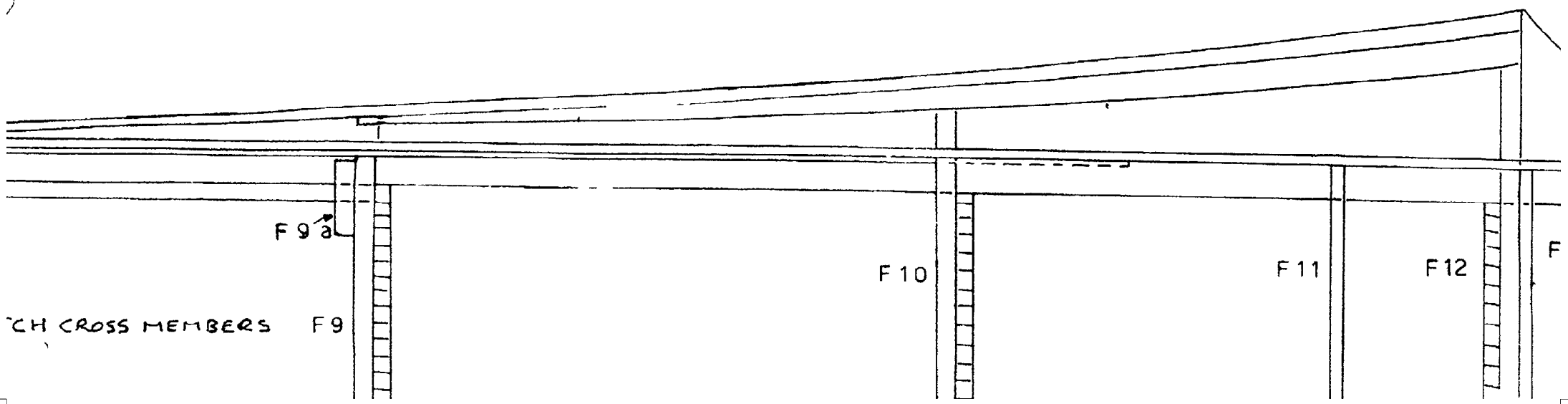

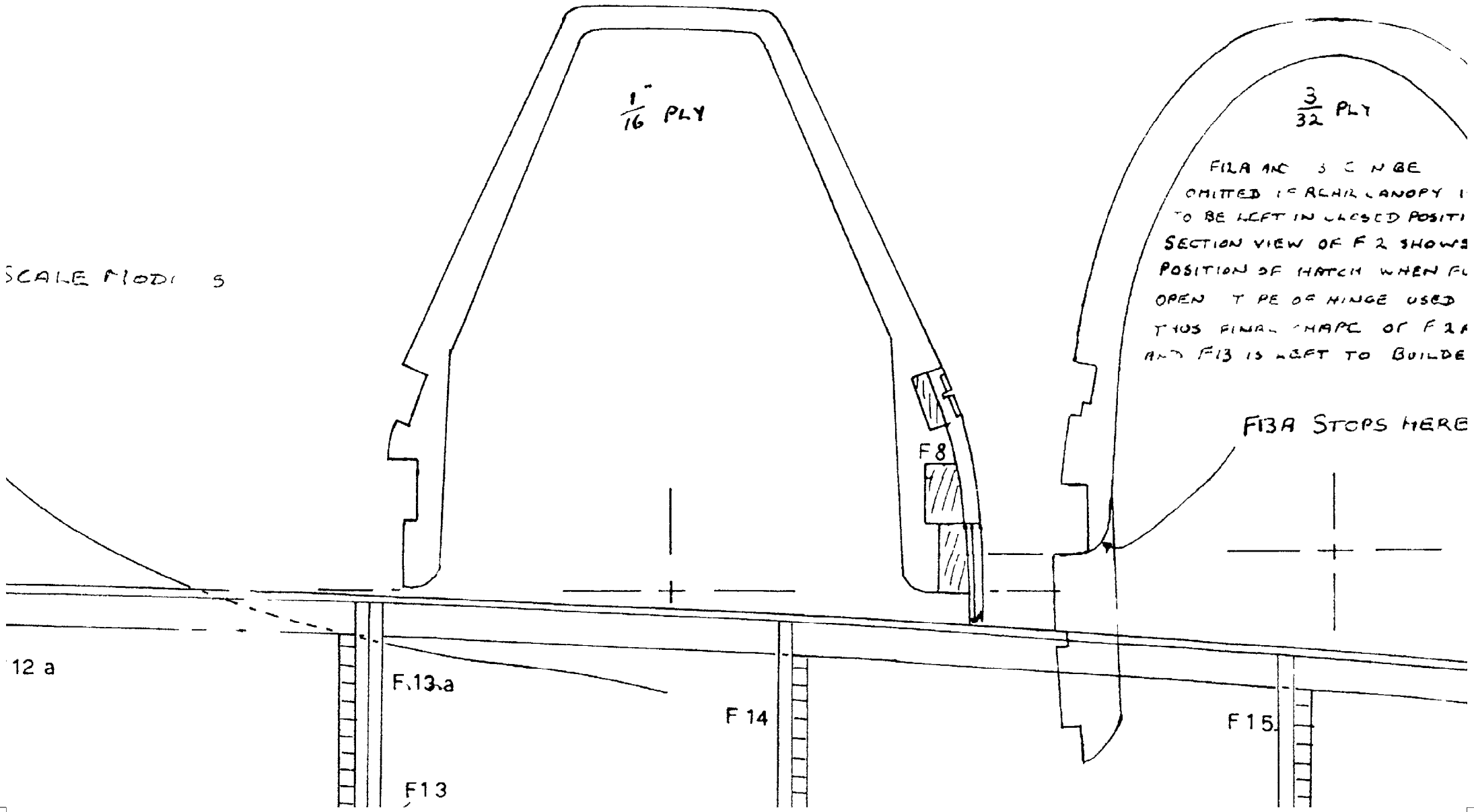
1/16" PLY
3/32 PLY
F12A AND 3 C N BE
OMITTED IF REAR CANOPY I
TO BE LEFT IN CLOSED POSITI
SECTION VIEW OF F 2 SHOWS
POSITION OF HATCH WHEN FU
OPEN T PE OF HINGE USED
THUS FINAL CHAPE OF F 2A
AND F13 IS LEFT TO BUILDE
F13A STOPS HERE
SCALE MODI S
F 8
12 a
F 13 a
F 14
F 15
F 13

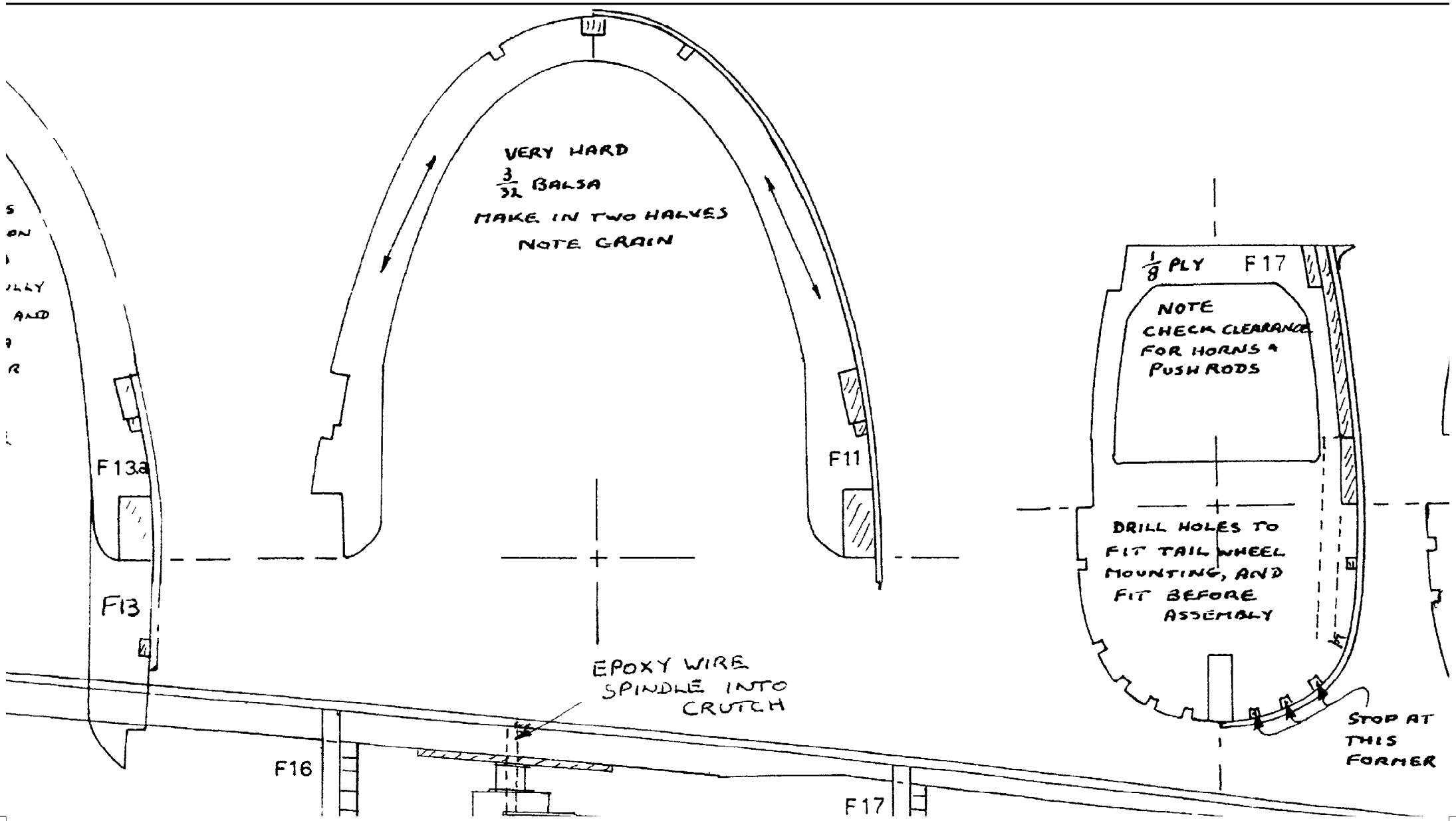
VERY HARD
3/32 BALSA
MAKE IN TWO HALVES
NOTE GRAIN
F13a
F13
F11
1/8 PLY
F17
NOTE
CHECK CLEARANCE
FOR HORNS &
PUSH RODS
DRILL HOLES TO
FIT TAIL WHEEL
MOUNTING, AND
FIT BEFORE
ASSEMBLY
EPOXY WIRE
SPINDLE INTO
CRUTCH
F16
F17
STOP AT
THIS
FORMER

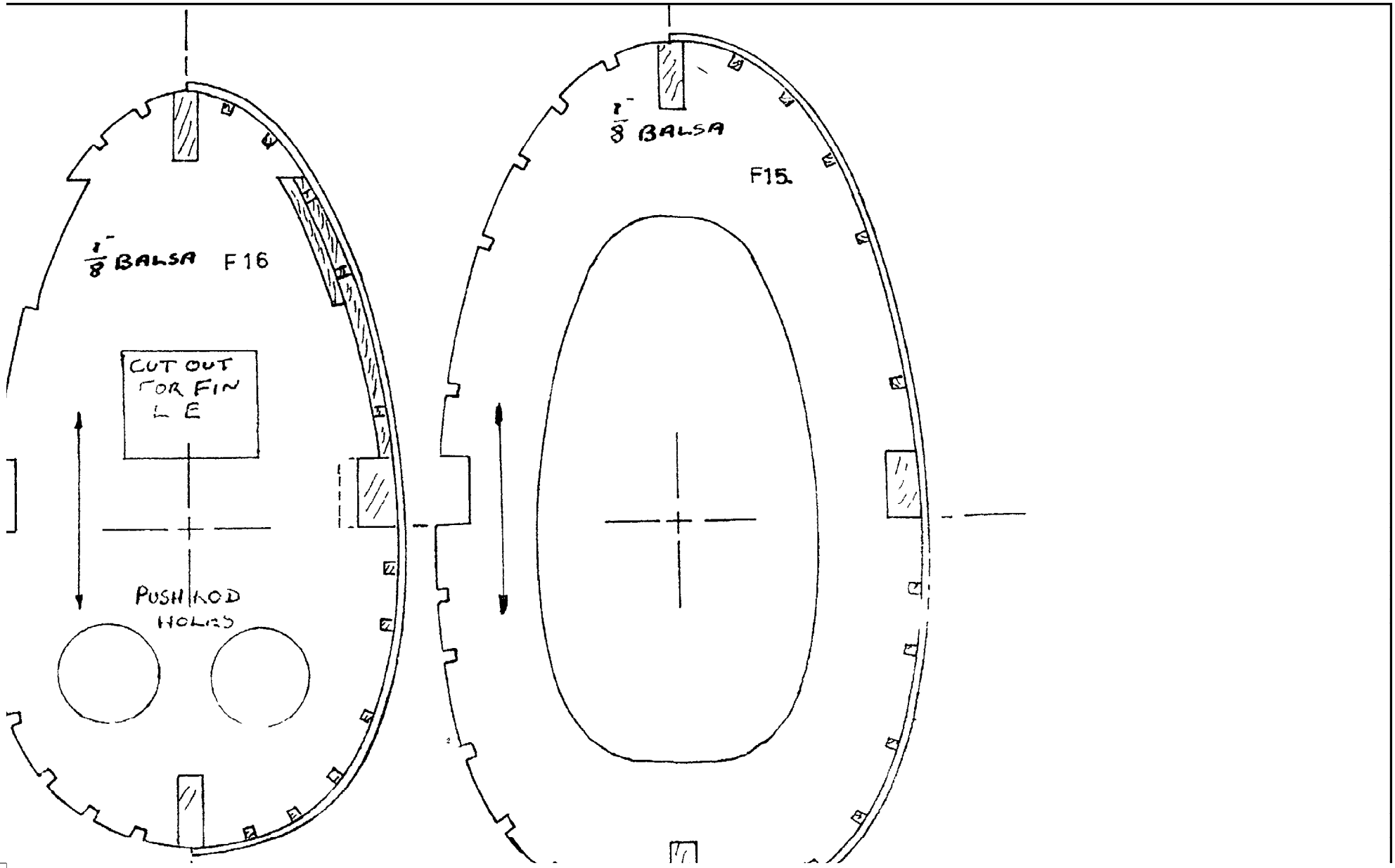
1/8" BALSA
F16
CUT OUT FOR FIN L E
PUSH ROD HOLES
1/8" BALSA
F15

A FINE PLASTIC MODEL OF THIS AIRCRAFT IS PRODUCED BY 'AIRFIX' WHICH IS VERY USEFUL FOR OBTAINING FINISH & DETAIL ETC
OTHER INFORMATION MAY BE OBTAINED FROM A VERY GOOD ARTICLE IN 'MAY 73' ISSUE OF SCALE MODELS

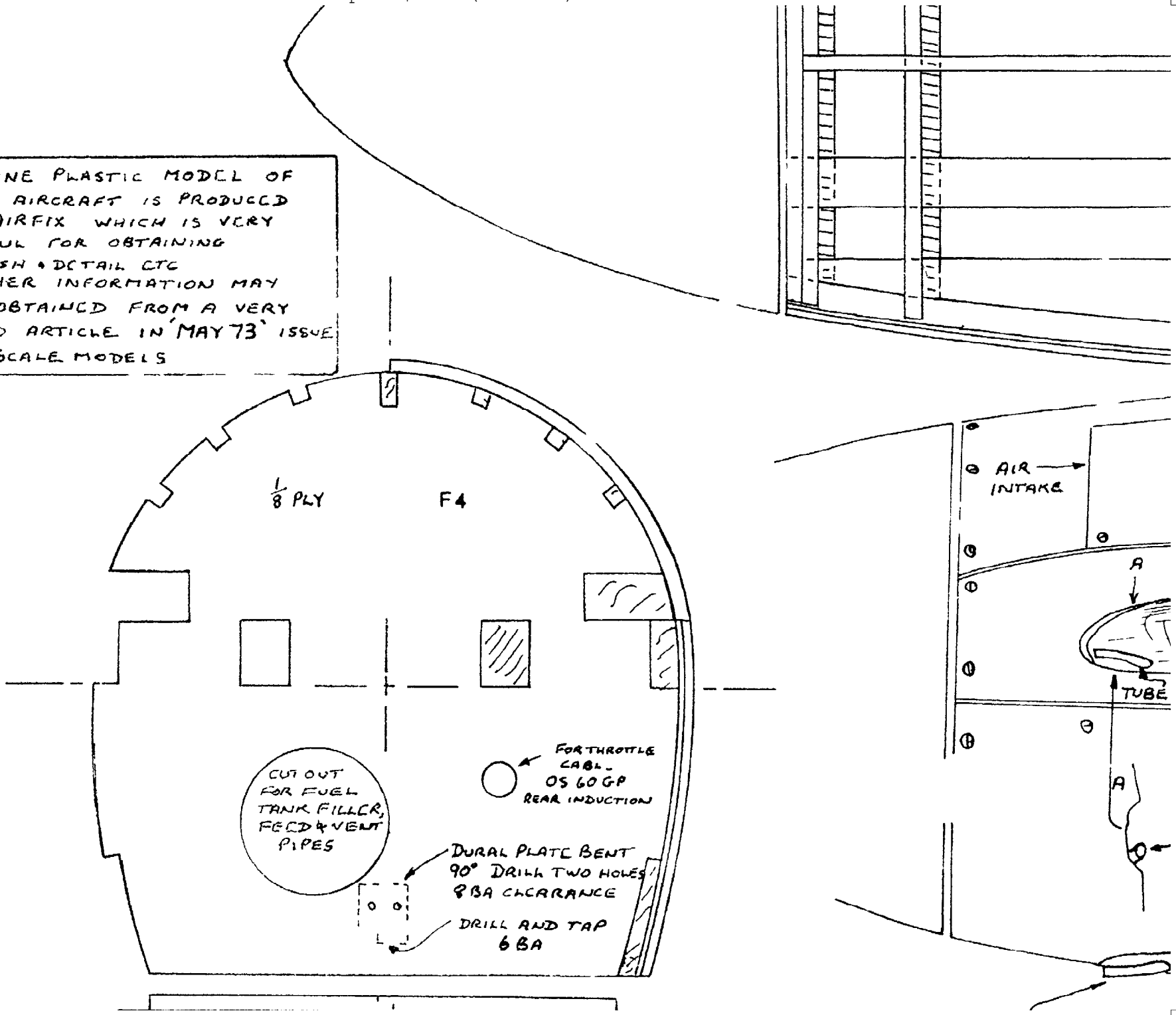

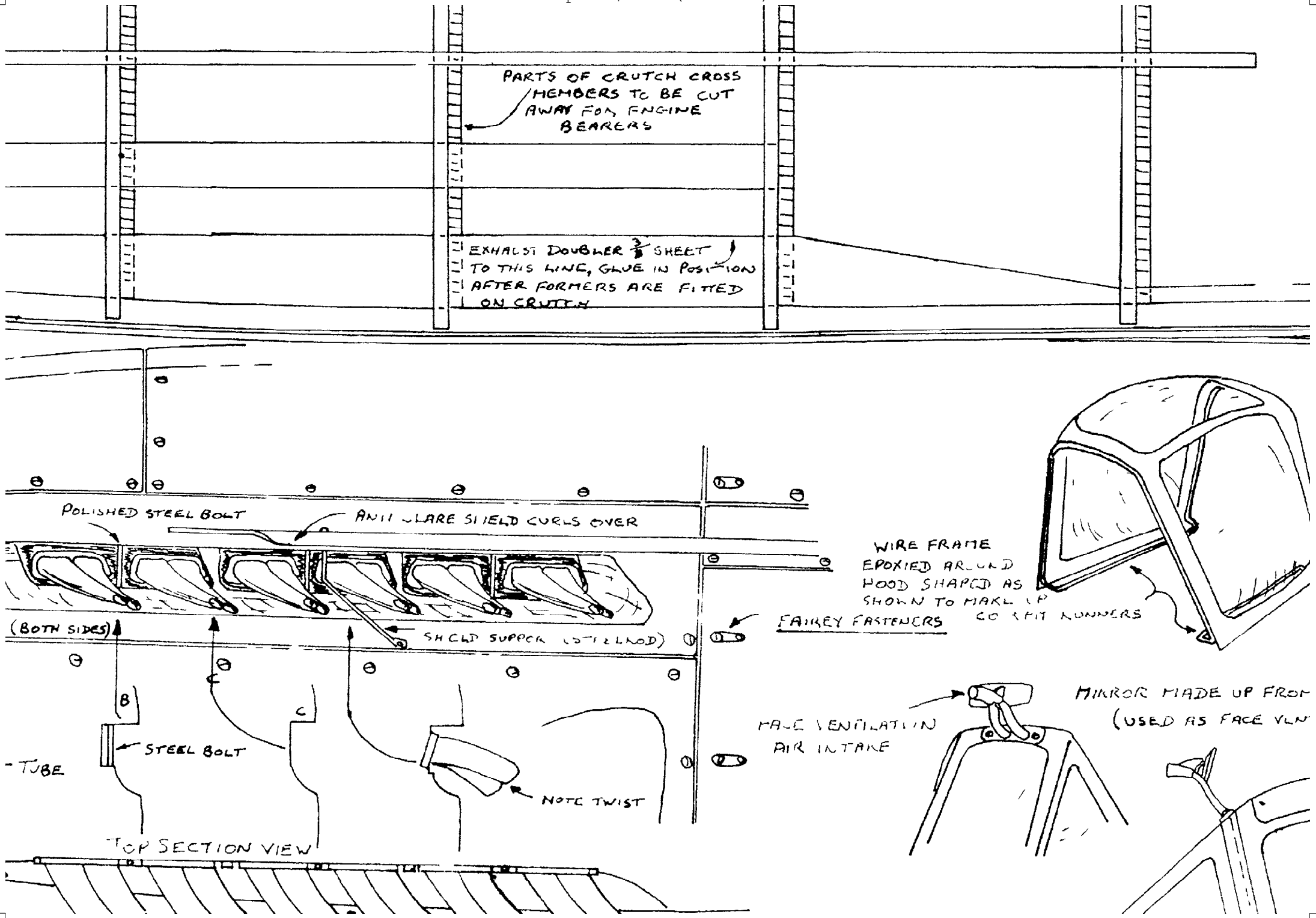
PARTS OF CRUTCH CROSS MEMBERS TO BE CUT AWAY FOR ENGINE BEARERS
EXHAUST DOUBLER 3/8 SHEET TO THIS LINE, GLUE IN POSITION AFTER FORMERS ARE FITTED ON CRUTCH
POLISHED STEEL BOLT
ANTI GLARE SHIELD CURLS OVER
(BOTH SIDES)
SHIELD SUPPORT (STEEL ROD)
FAIREY FASTENERS
WIRE FRAME EPOXIED AROUND HOOD SHAPED AS SHOWN TO MAKE UP CO PIT RUNNERS
B
C
C
STEEL BOLT
TUBE
NOTE TWIST
TOP SECTION VIEW
MAKE VENTILATION AIR INTAKE
MIRROR MADE UP FROM (USED AS FACE VIEW

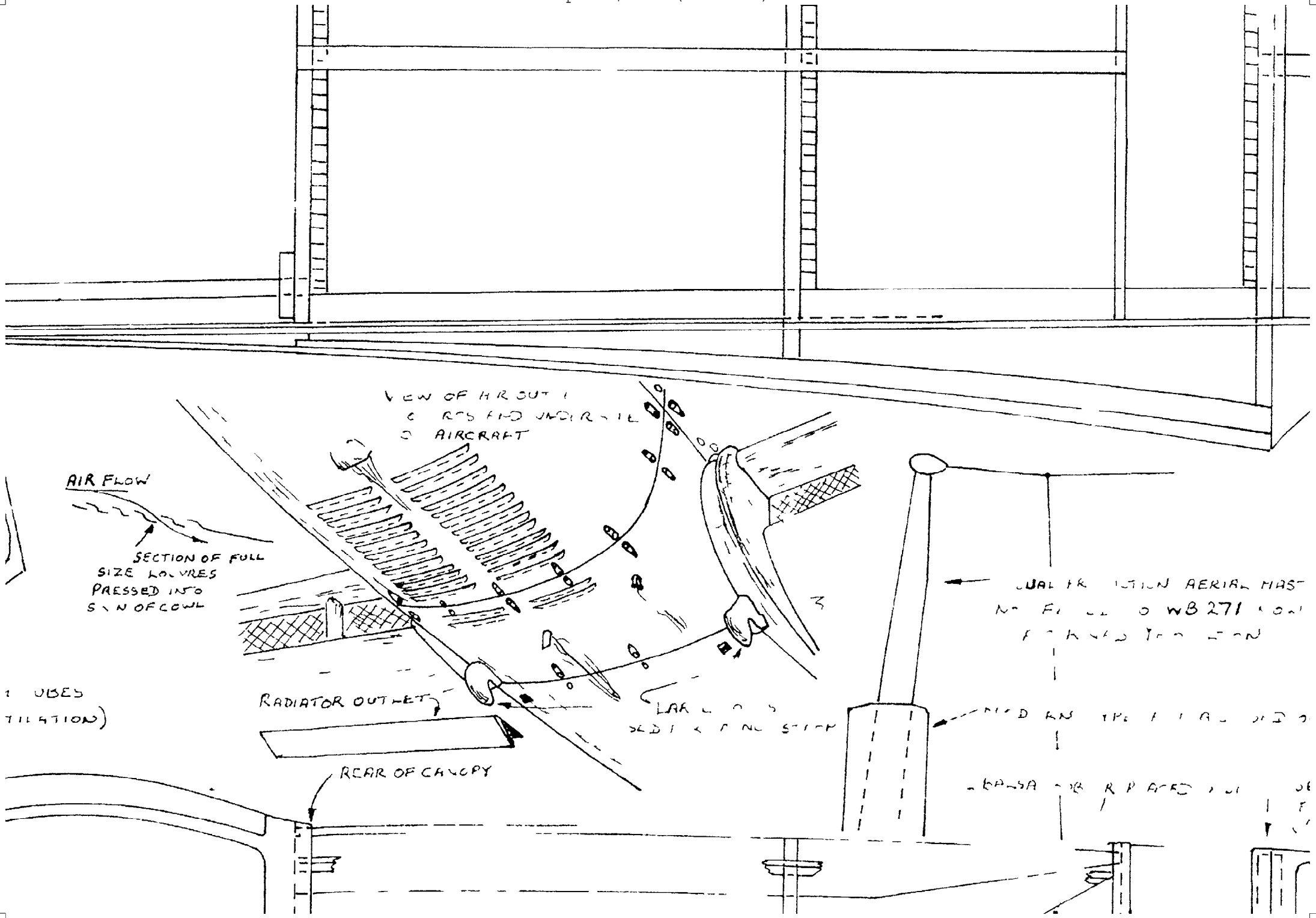
AIR FLOW
SECTION OF FULL SIZE LOUVRES PRESSED INTO SIDE OF COWL
AIRCRAFT
RADIATOR OUTLET
REAR OF CANOPY

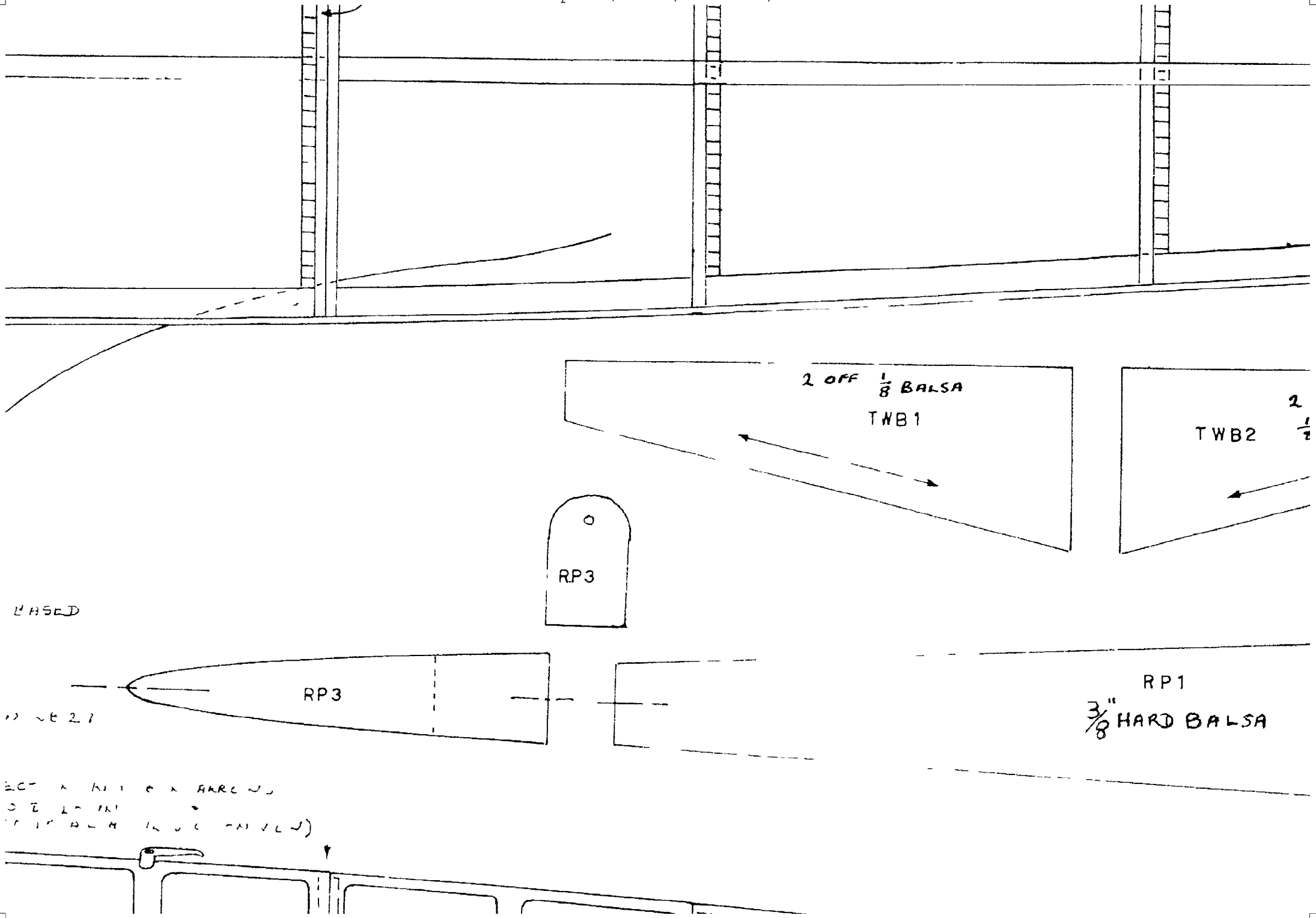
2 OFF 1/8 BALSA
TWB1
TWB2
RP3
RP3
RP1
3/8" HARD BALSA

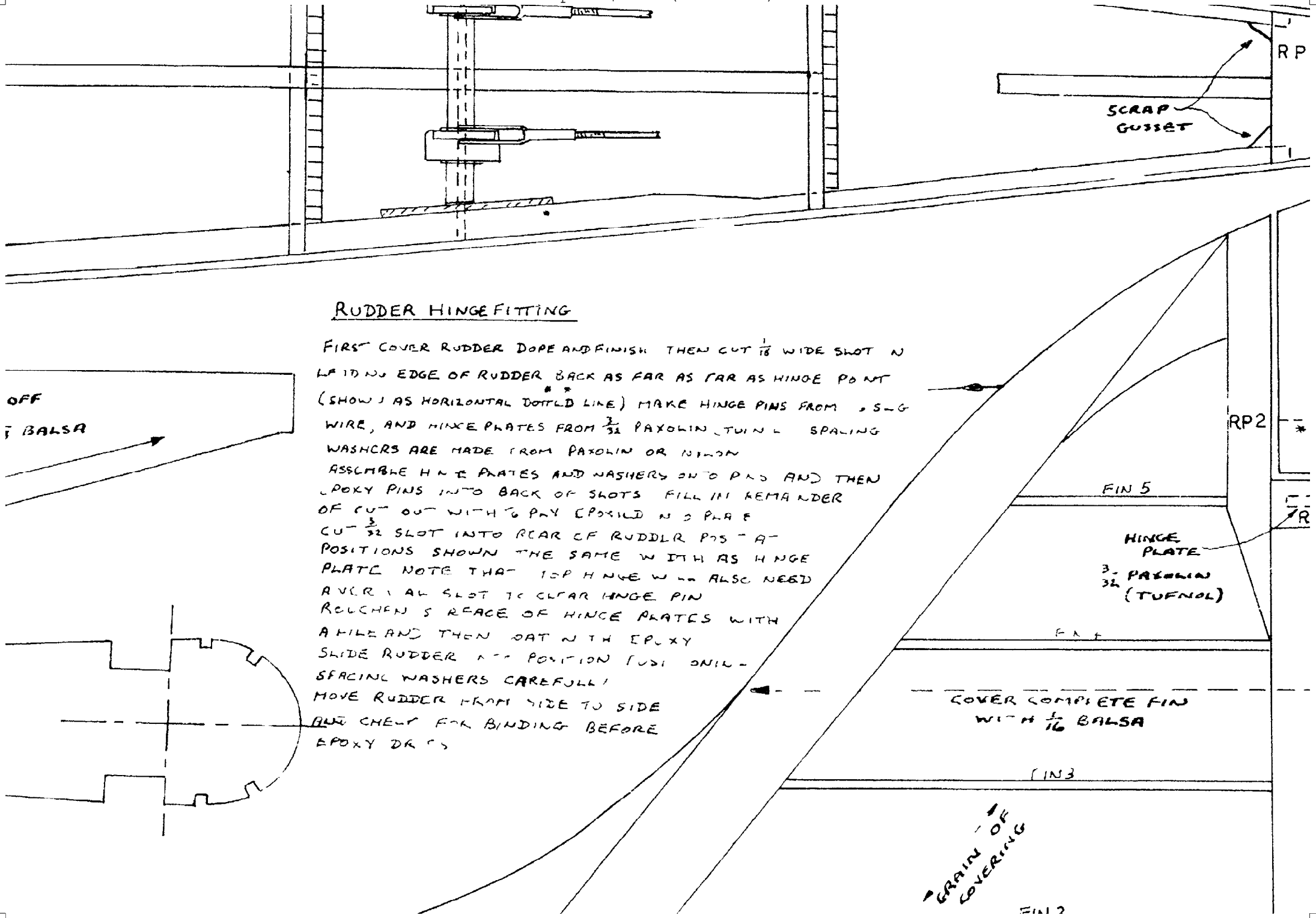

RUDDER HINGE FITTING

FIRST COVER RUDDER DOPE AND FINISH THEN CUT 1/16 WIDE SLOT IN LAID ON EDGE OF RUDDER BACK AS FAR AS FAR AS HINGE POINT (SHOWN AS HORIZONTAL DOTTED LINE) MAKE HINGE PINS FROM 20 S.W.G WIRE, AND HINGE PLATES FROM 3/32 PAXOLIN (TUFNOL) SPACING WASHERS ARE MADE FROM PAXOLIN OR NYLON

ASSEMBLE HINGE PLATES AND WASHERS ONTO PINS AND THEN EPOXY PINS INTO BACK OF SLOTS FILL IN REMAINDER OF CUT OUT WITH 1/16 PLY EPOXIED IN PLACE

CUT 3/32 SLOT INTO REAR OF RUDDER POSITIONS SHOWN THE SAME WIDTH AS HINGE PLATE NOTE THAT TOP HINGE WILL ALSO NEED A VERTICAL SLOT TO CLEAR HINGE PIN

ROUGHEN SURFACE OF HINGE PLATES WITH A FILE AND THEN COAT WITH EPOXY

SLIDE RUDDER INTO POSITION (USE ONLY SPACING WASHERS CAREFULLY)

MOVE RUDDER FROM SIDE TO SIDE AND CHECK FOR BINDING BEFORE EPOXY DRYS

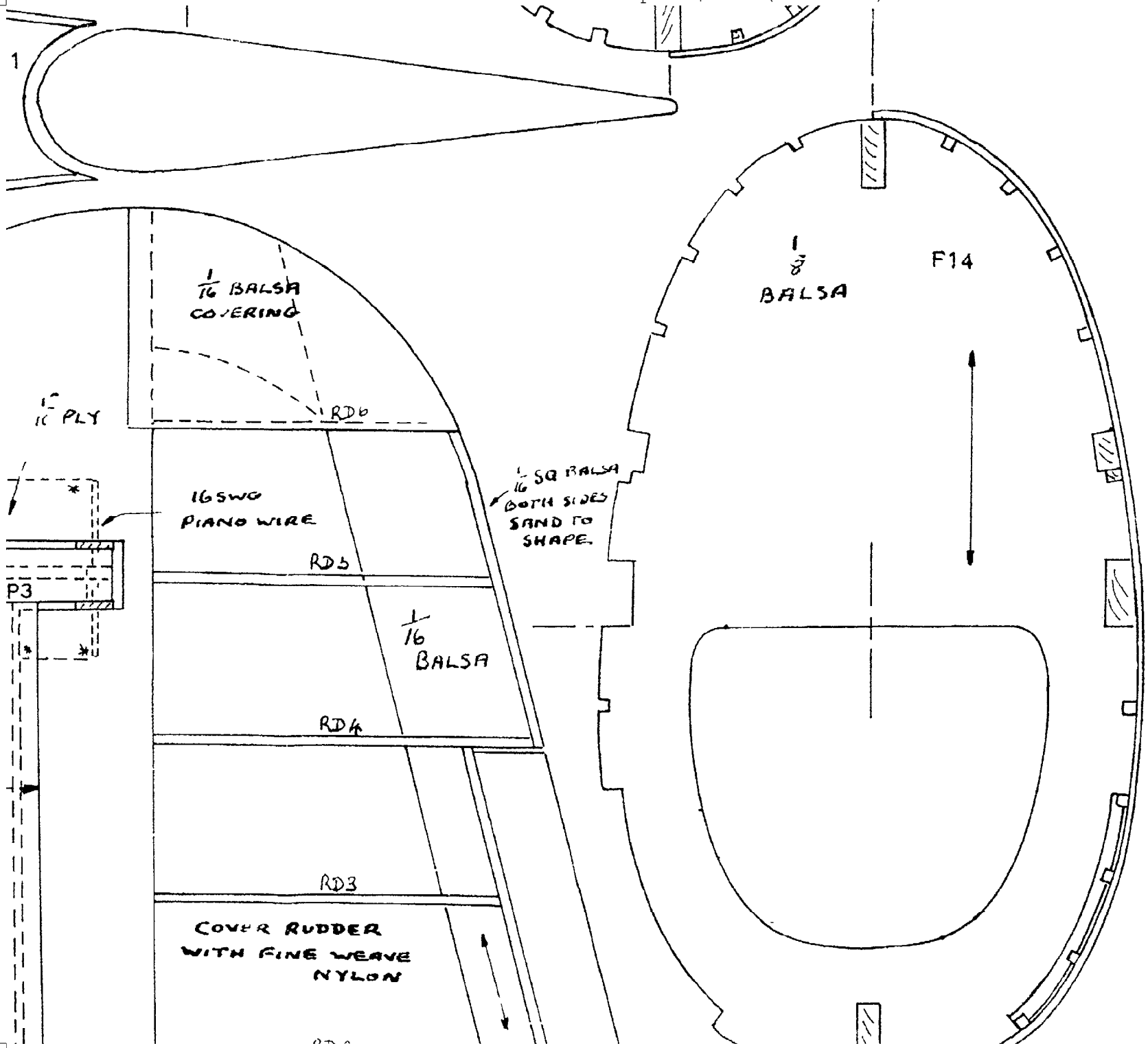
1
1/16 BALSA COVERING
1/16 PLY
RD6
16SWG PIANO WIRE
P3
RD5
1/16 BALSA
RD4
RD3
COVER RUDDER WITH FINE WEAVE NYLON
1/16 SQ BALSA BOTH SIDES SAND TO SHAPE.
1/8 BALSA
F14

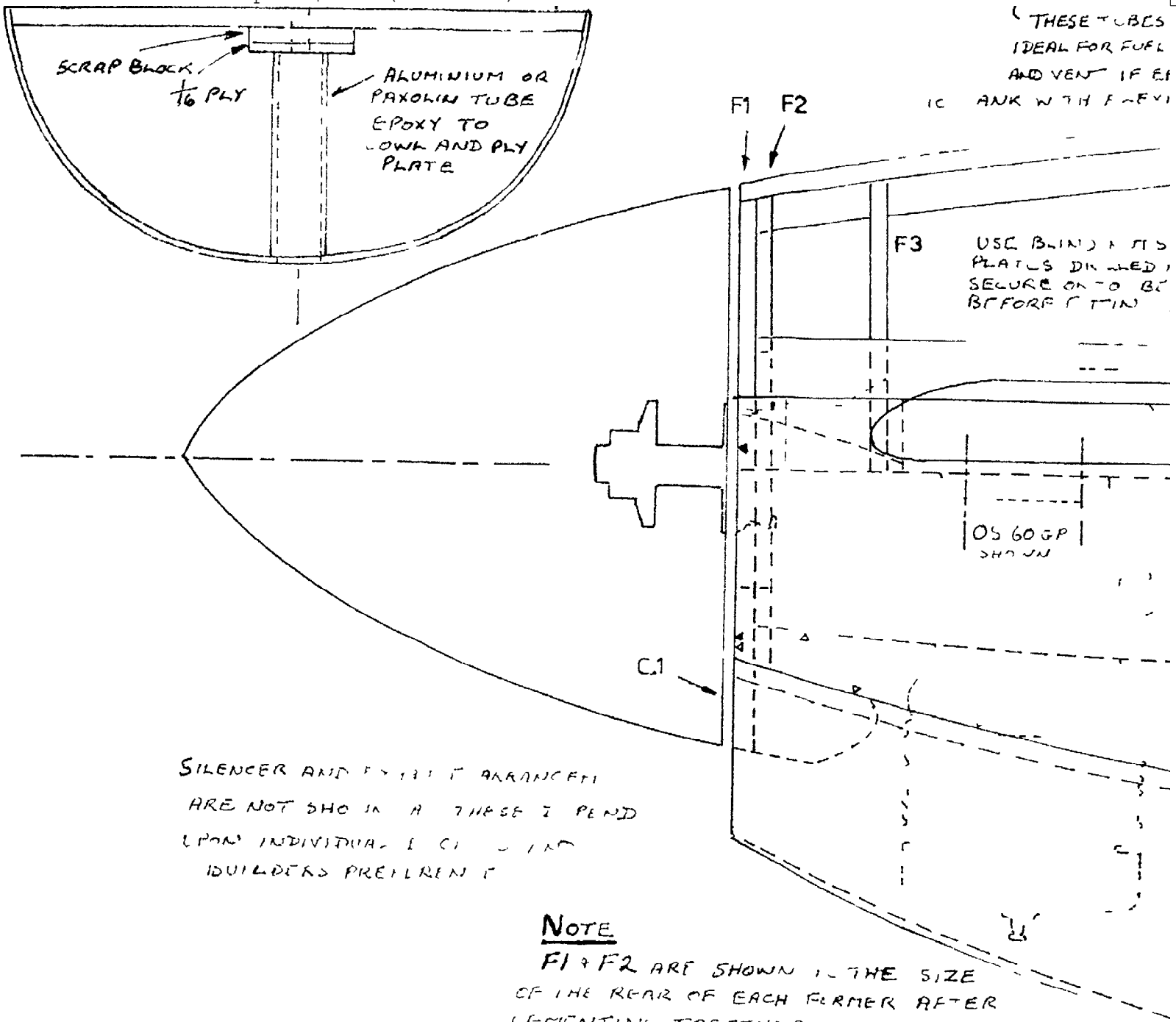

NOTE

F1 + F2 ARE SHOWN
OF THE REAR OF EACH FORMER AFTER
CEMENTING TOGETHER, CHAMFER AS ON TOP
AND IDE VIEW, SO AS TO SEAT THE TOP
IE SING CORRECTLY

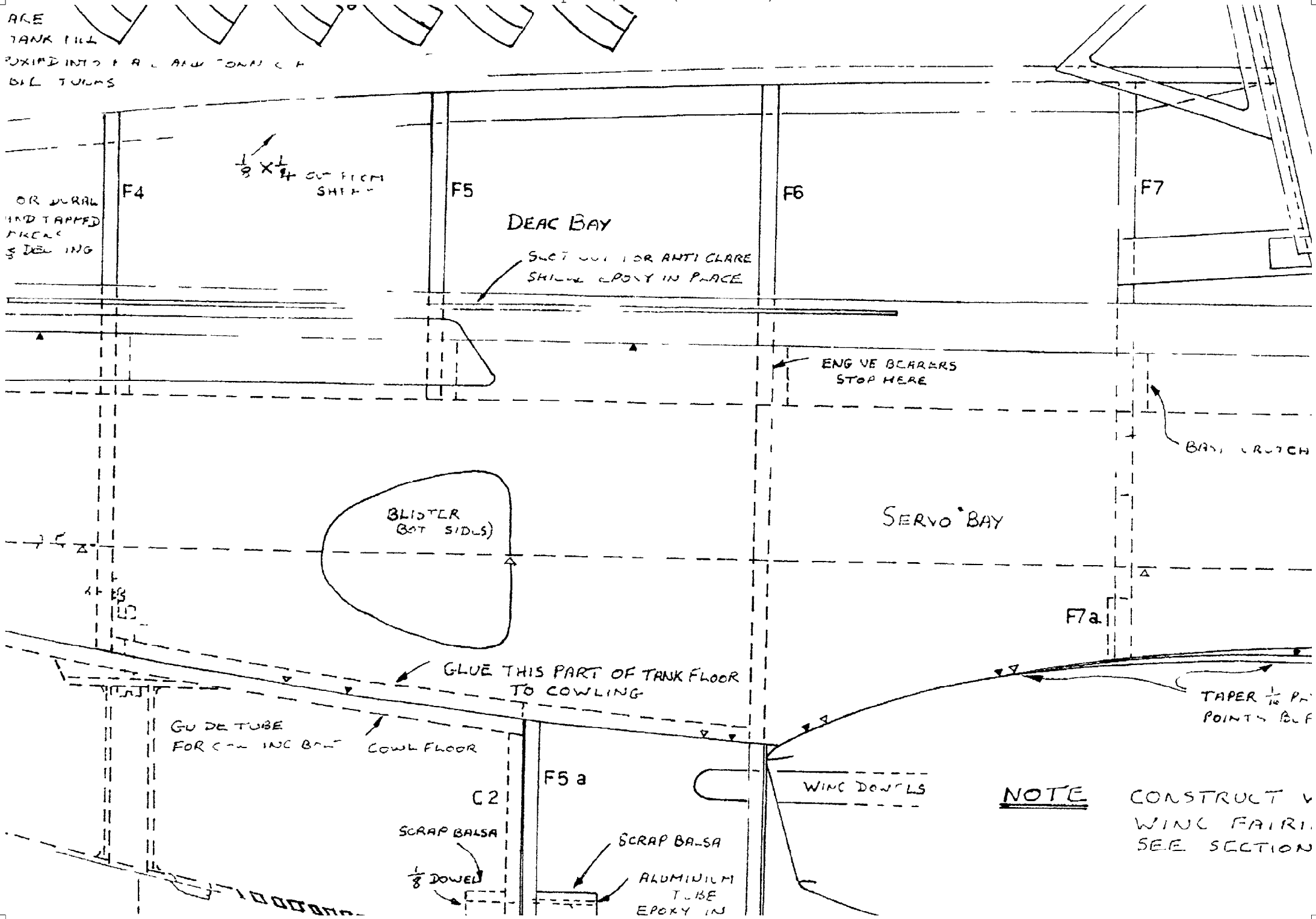
F4
F5
F6
F7
DEAC BAY
SERVO BAY
BLISTER
F7a
F5 a
C2
GLUE THIS PART OF TANK FLOOR
TO COWLING
COWL FLOOR
WING DOWELS
SCRAP BALSA
SCRAP BALSA
ALUMINIUM
TUBE
EPOXY IN
ENG VE BEARERS
STOP HERE
NOTE

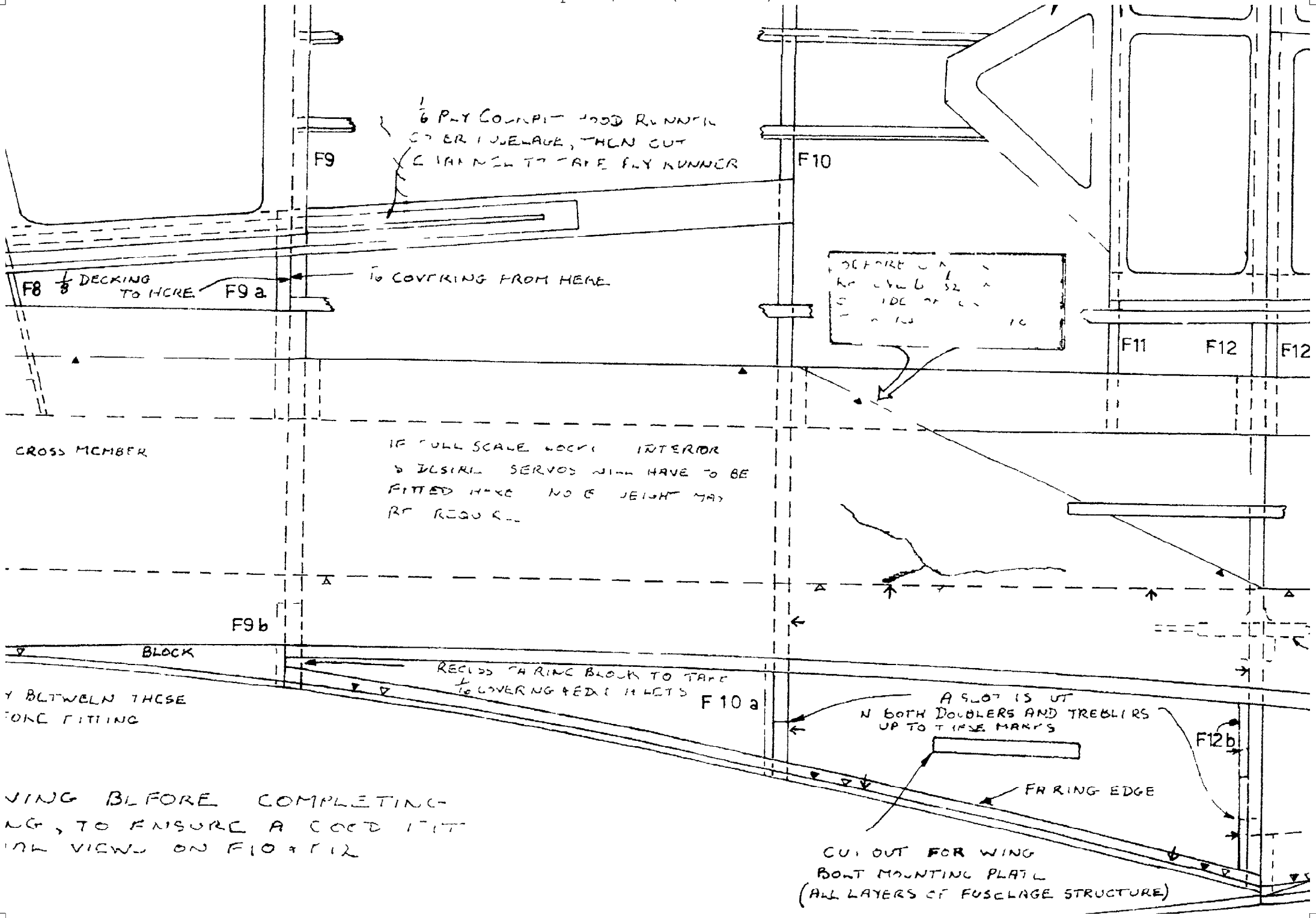
1/6 PLY COCKPIT HOOD RUNNER
OVER FUSELAGE, THEN CUT
CHANNEL TO TAKE PLY RUNNER
F9
F10
F8
1/8 DECKING
TO HERE
F9 a
TO COVERING FROM HERE
F11
F12
F12
CROSS MEMBER
IF FULL SCALE WORK INTERIOR
& DESIRE SERVOS WILL HAVE TO BE
FITTED HERE NO EXTRA WEIGHT MAY
BE REQUIRED
F9 b
BLOCK
RECESS FAIRING BLOCK TO TAKE
1/16 COVERING & EDGE INLETS
F 10 a
A SLOT IS CUT
IN BOTH DOUBLERS AND TREBLERS
UP TO THESE MARKS
F12 b
FAIRING EDGE
CUT OUT FOR WING
BOLT MOUNTING PLATE
(ALL LAYERS OF FUSELAGE STRUCTURE)
BETWEEN THESE
FORE FITTING
WING BEFORE COMPLETING
ING, TO ENSURE A GOOD FIT
VIEW ON F10 & F12

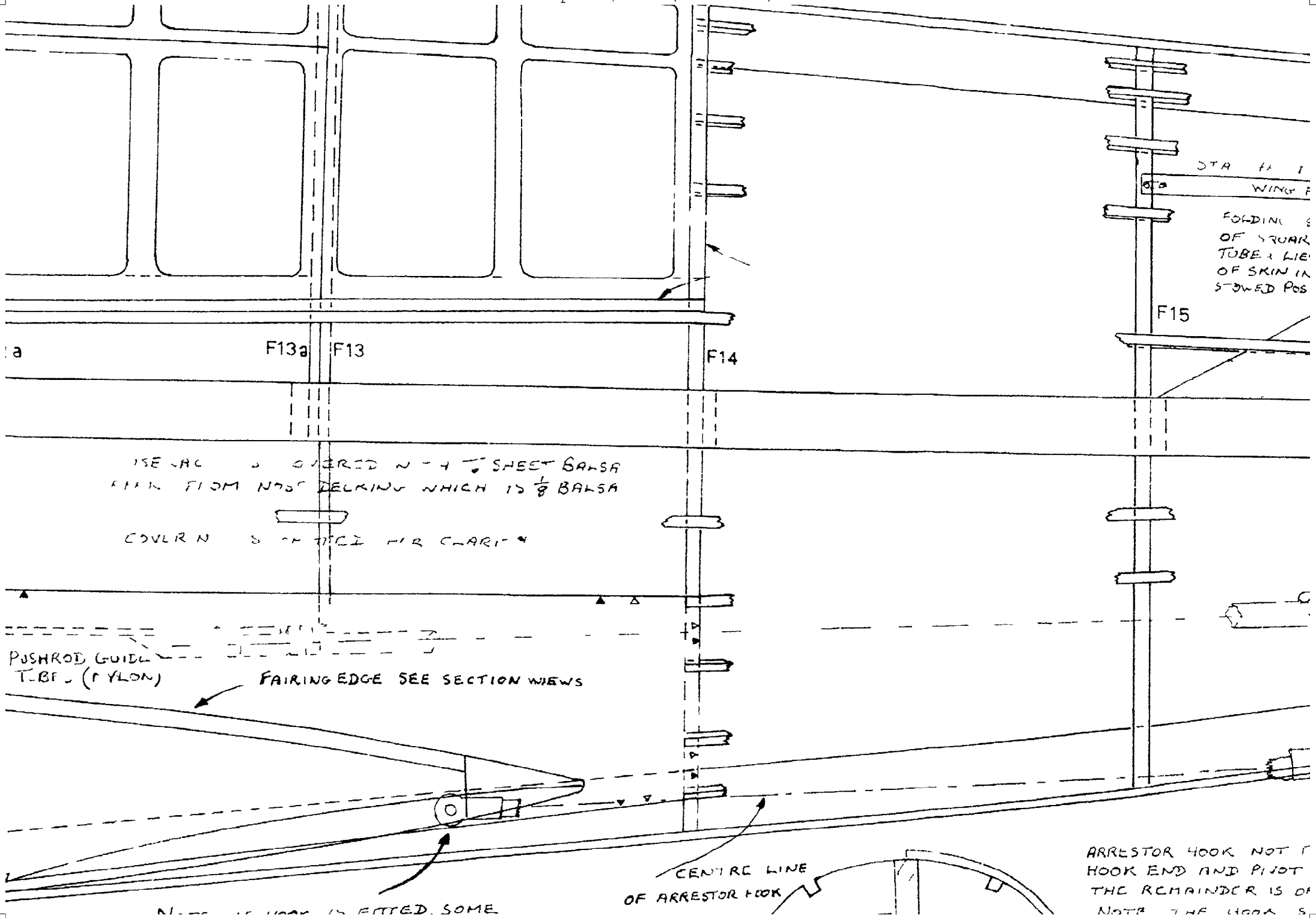
F13a
F13
F14
F15
FAIRING EDGE SEE SECTION VIEWS
CENTRE LINE
OF ARRESTOR HOOK

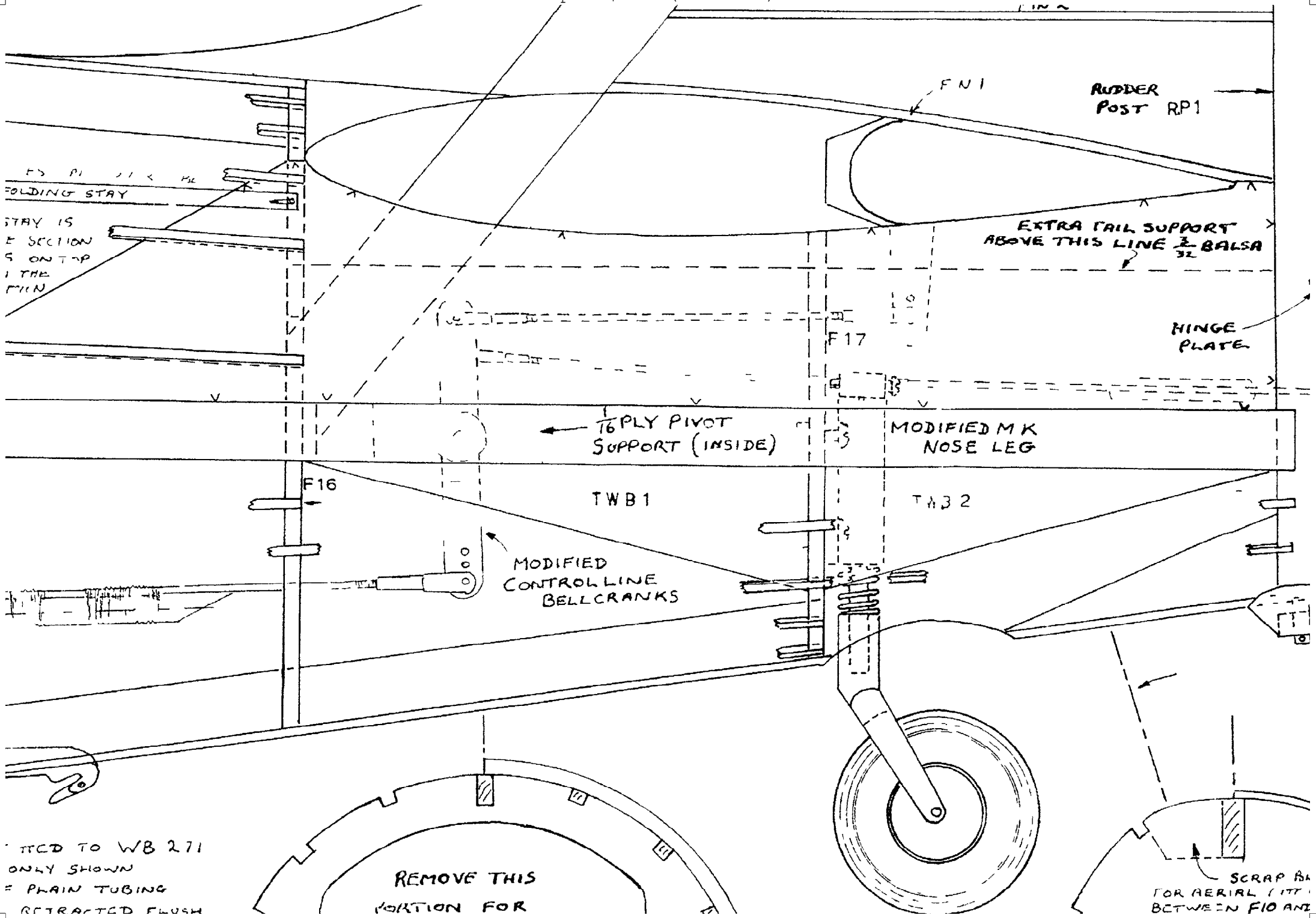
FN1
RUDDER POST RP1
FOLDING STAY
EXTRA TAIL SUPPORT ABOVE THIS LINE 3/32 BALSA
HINGE PLATE
F17
1/16 PLY PIVOT SUPPORT (INSIDE)
MODIFIED MK NOSE LEG
F16
TWB1
TWB2
MODIFIED CONTROL LINE BELLCRANKS
REMOVE THIS PORTION FOR
TO WB 271
ONLY SHOWN
PLAIN TUBING
RETRACTED FLUSH
SCRAP
FOR AERIAL
BETWEEN F10

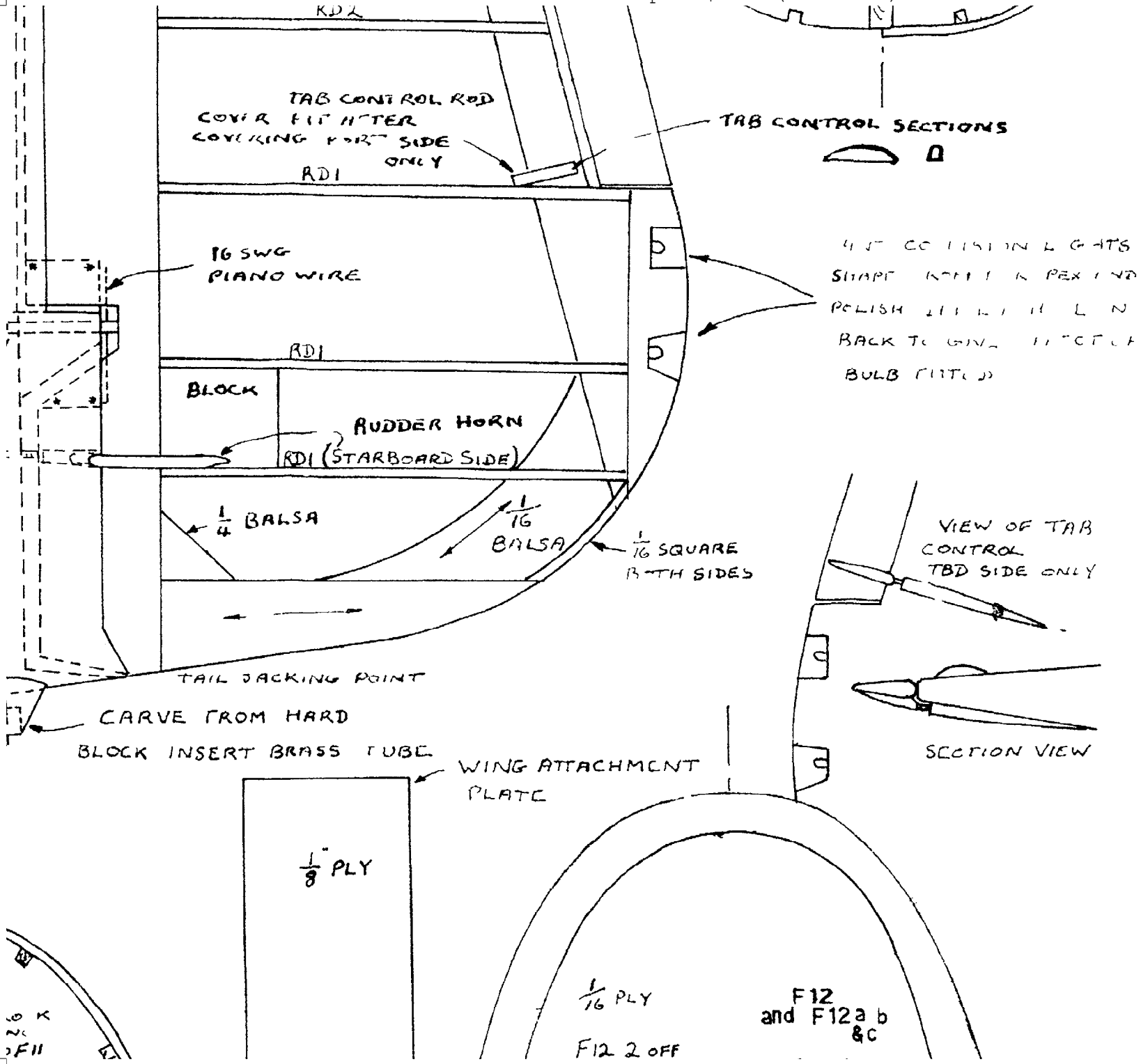
RD2
TAB CONTROL ROD
COVER FIT AFTER
COVERING PORT SIDE
ONLY
RD1
TAB CONTROL SECTIONS
16 SWG
PIANO WIRE
RD1
BLOCK
RUDDER HORN
RD1 (STARBOARD SIDE)
1/4 BALSA
1/16
BALSA
1/16 SQUARE
BOTH SIDES
VIEW OF TAB
CONTROL
TBD SIDE ONLY
TAIL JACKING POINT
CARVE FROM HARD
BLOCK INSERT BRASS TUBE
WING ATTACHMENT
PLATE
SECTION VIEW
1/8" PLY
1/16 PLY
F12 2 OFF
F12
and F12a b
&c

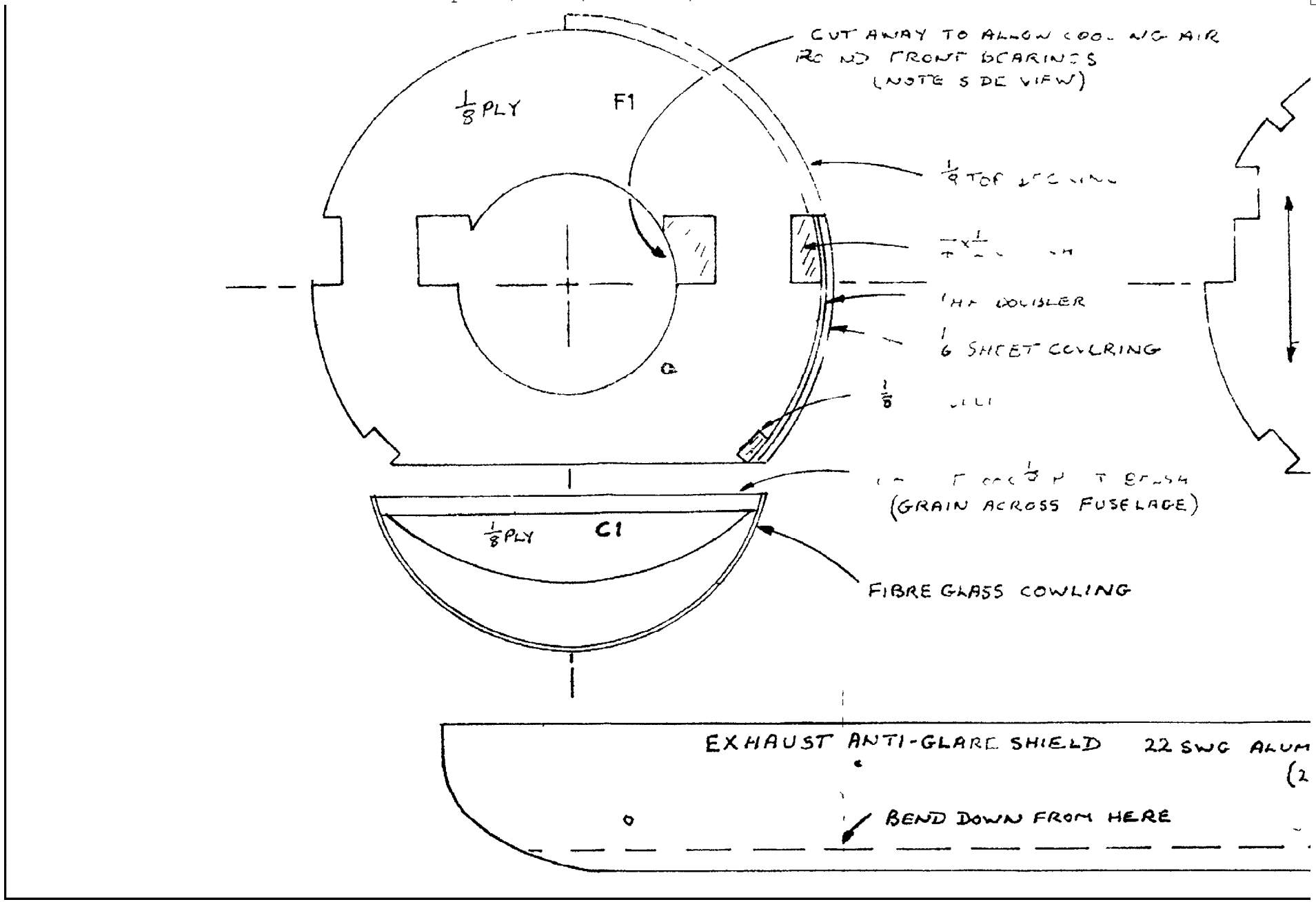
CUT AWAY TO ALLOW COOLING AIR
(NOTE SIDE VIEW)
1/8 PLY
F1
1/8 TOP
DOUBLER
1/6 SHEET COVERING
(GRAIN ACROSS FUSELAGE)
1/8 PLY
C1
FIBRE GLASS COWLING
EXHAUST ANTI-GLARE SHIELD
22 SWG ALUM
BEND DOWN FROM HERE

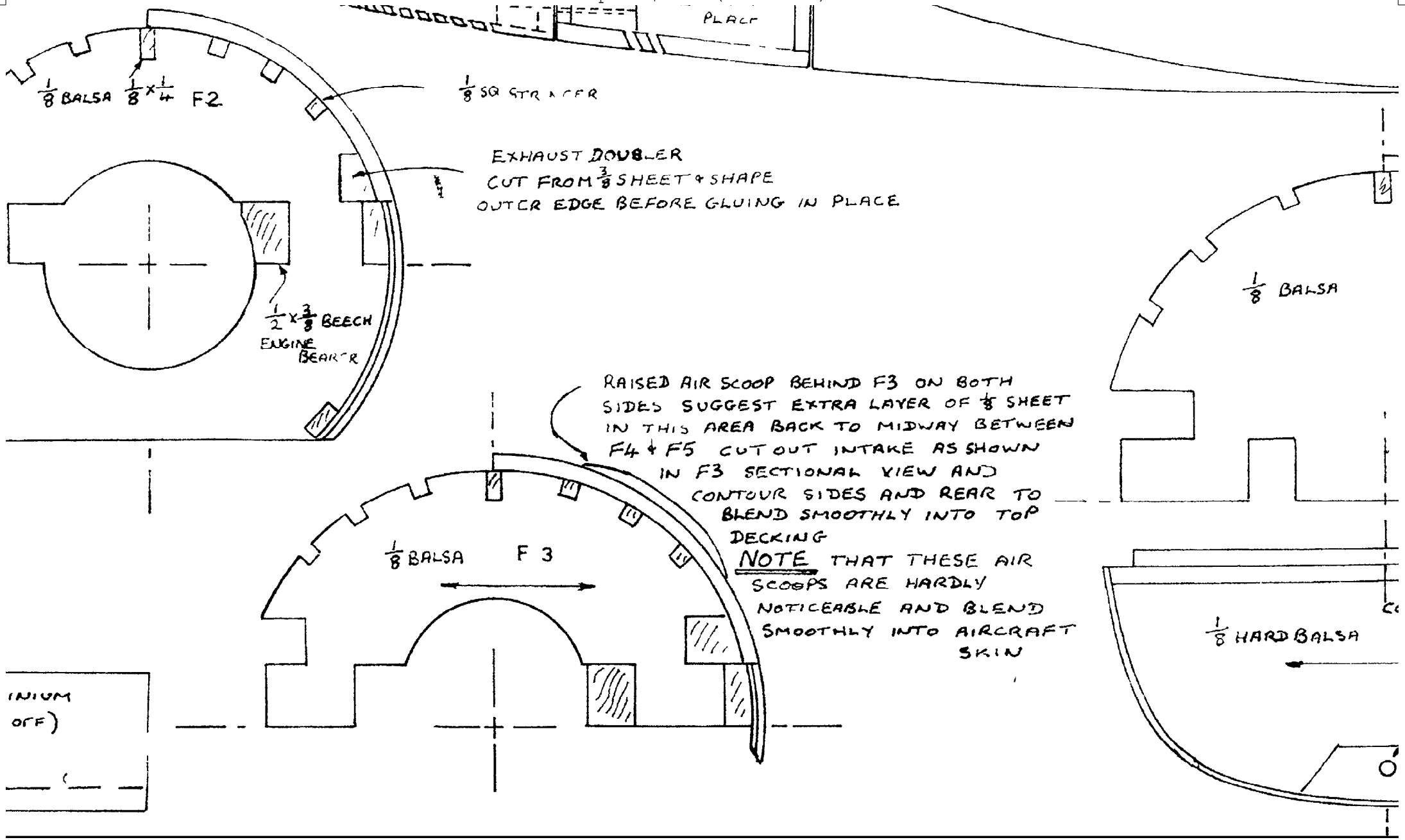
PLACE
1/8 BALSA 1/8 x 1/4 F2
1/8 SQ STRINGER
EXHAUST DOUBLER
CUT FROM 3/8 SHEET & SHAPE
OUTER EDGE BEFORE GLUING IN PLACE
1/2 x 3/8 BEECH
ENGINE BEARER
1/8 BALSA
RAISED AIR SCOOP BEHIND F3 ON BOTH
SIDES SUGGEST EXTRA LAYER OF 1/8 SHEET
IN THIS AREA BACK TO MIDWAY BETWEEN
F4 & F5 CUT OUT INTAKE AS SHOWN
IN F3 SECTIONAL VIEW AND
CONTOUR SIDES AND REAR TO
BLEND SMOOTHLY INTO TOP
DECKING
NOTE THAT THESE AIR
SCOOPS ARE HARDLY
NOTICEABLE AND BLEND
SMOOTHLY INTO AIRCRAFT
SKIN
1/8 BALSA F 3
1/8 HARD BALSA

▲ 1mm PLY DOUBLER OUTLINE

△ 1/8 BALSA TREBLER OUTLINE

↑ 1/8 BALSA WING BOLT SUPPORT OUTLINE

^ 3/32" BALSA TAILPLANE SUPPORT DOUBLER OUTLINE

NOTE FOR ACCURATE FITTING OF BOTH PLY DOUBLER AND BALSA TREBLER, THE LOWER EDGE OF THESE COMPONENTS SHOULD BE CUT OUT 1/8 OVERSIZE BETWEEN FORMERS - F1 TO F6 AND F12 TO F14 CHECK AGAINST FORMERS AND TRIM TO SIZE LATER USE OF STEAM & PREFORMING WILL GREATLY ASSIST FITTING OF THESE ITEMS

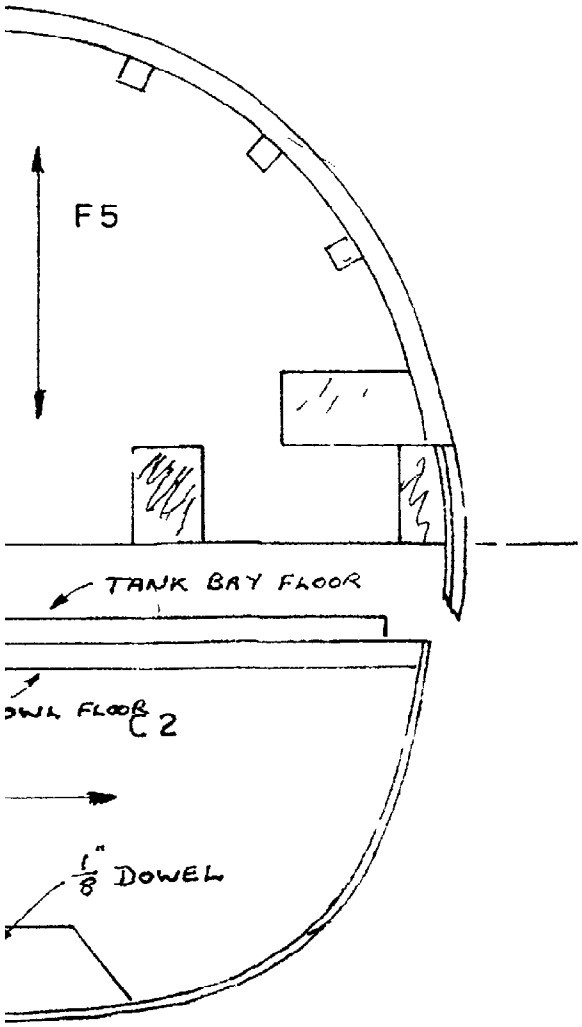

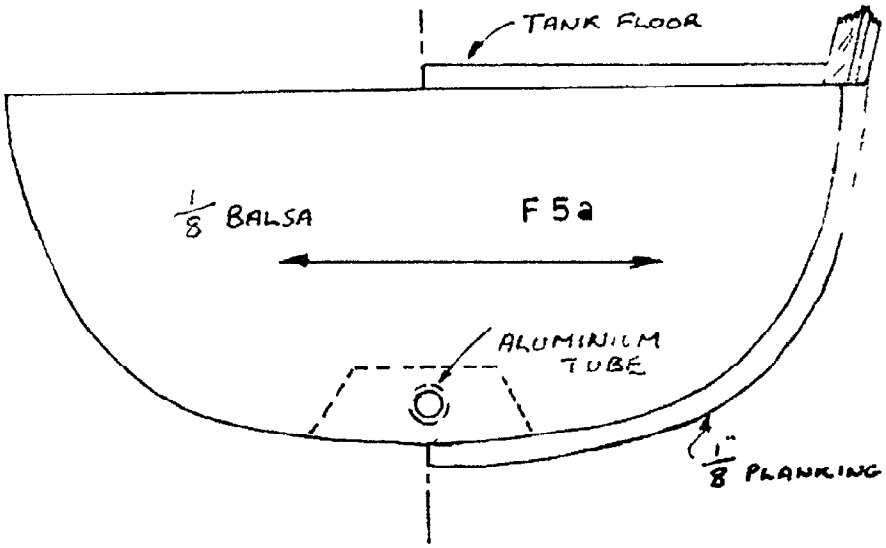

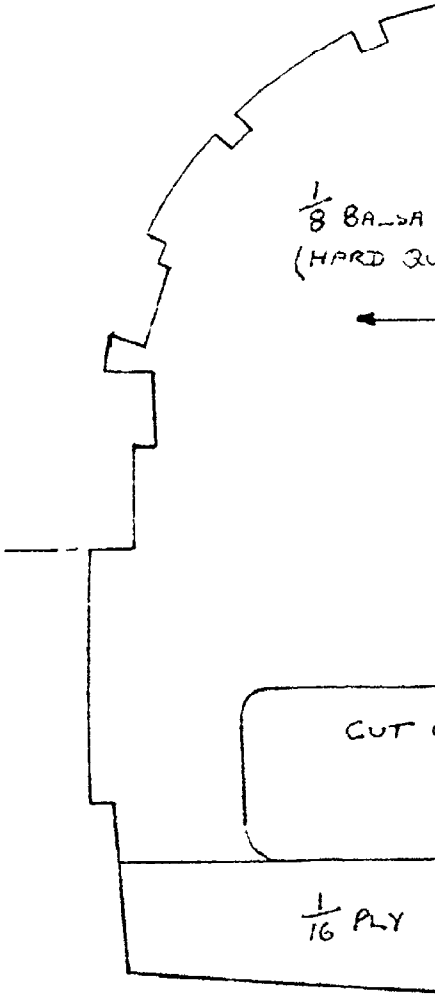

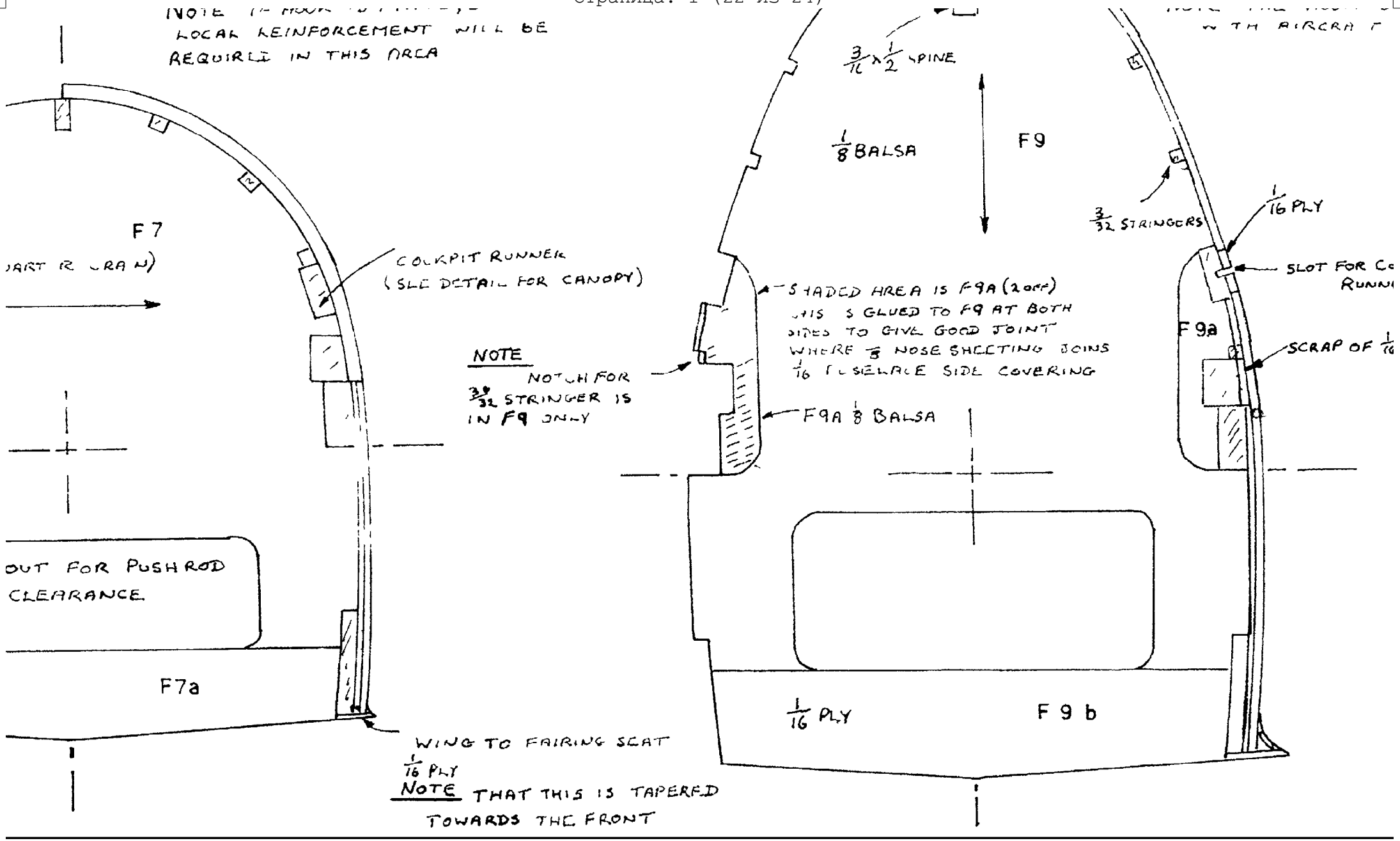
LOCAL REINFORCEMENT WILL BE
REQUIRED IN THIS AREA
F 7
COCKPIT RUNNER
(SEE DETAIL FOR CANOPY)
NOTE
NOTCH FOR
3/32 STRINGER IS
IN F9 ONLY
OUT FOR PUSHROD
CLEARANCE
F7a
WING TO FAIRING SEAT
1/16 PLY
NOTE THAT THIS IS TAPERED
TOWARDS THE FRONT
3/16 x 1/2 SPINE
1/8 BALSA
F9
SHADED AREA IS F9A (2 OFF)
THIS IS GLUED TO F9 AT BOTH
SIDES TO GIVE GOOD JOINT
WHERE 1/8 NOSE SHEETING JOINS
1/16 FUSELAGE SIDE COVERING
F9A 1/8 BALSA
1/16 PLY
F 9 b
3/32 STRINGERS
1/16 PLY
F 9a
SCRAP OF 1/16

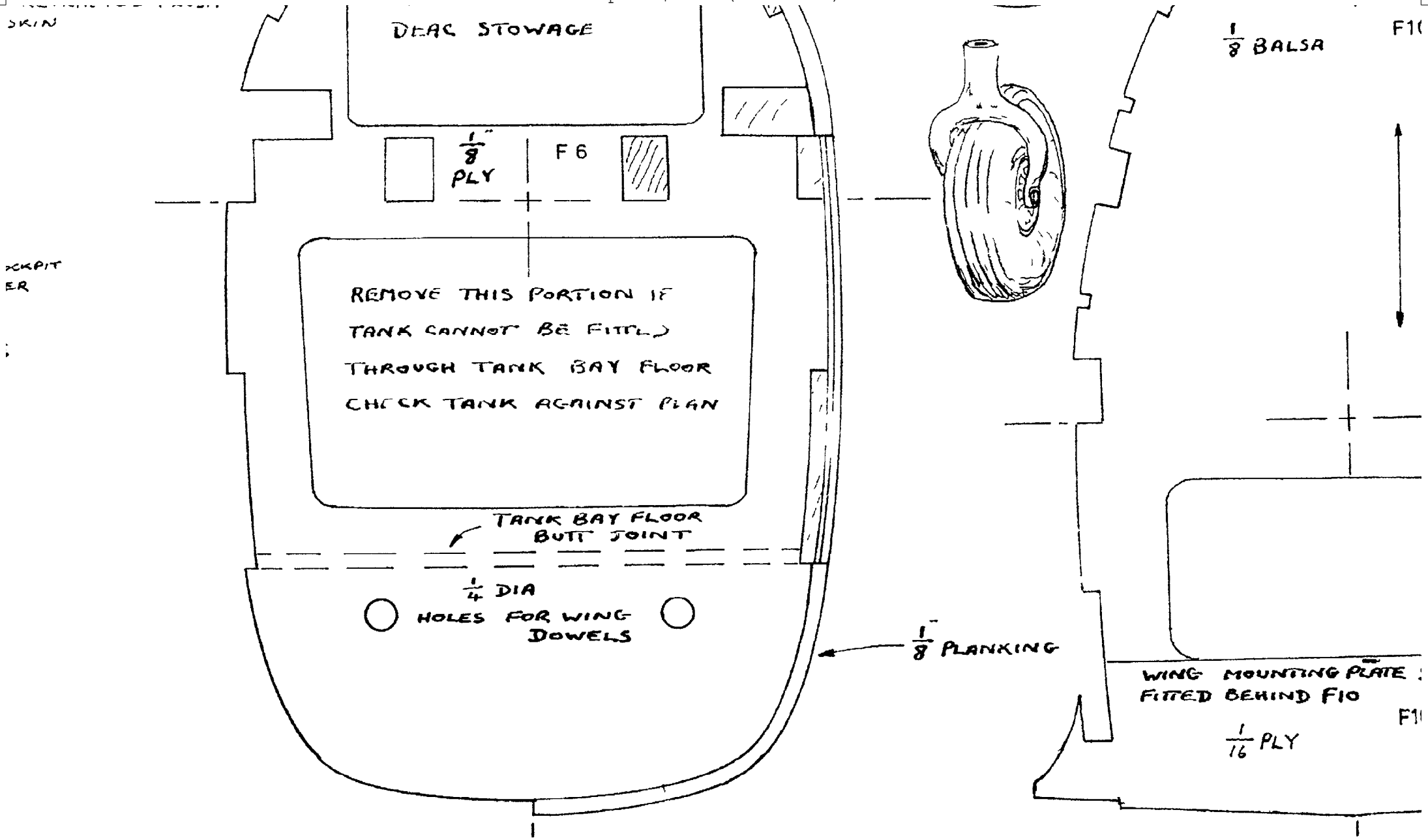
SKIN
DEAD STOWAGE
1/8" PLY
F 6
REMOVE THIS PORTION IF
TANK CANNOT BE FITTED
THROUGH TANK BAY FLOOR
CHECK TANK AGAINST PLAN
TANK BAY FLOOR
BUTT JOINT
1/4 DIA
HOLES FOR WING
DOWELS
1/8" PLANKING
1/8 BALSA
F10
WING MOUNTING PLATE
FITTED BEHIND F10
1/16 PLY

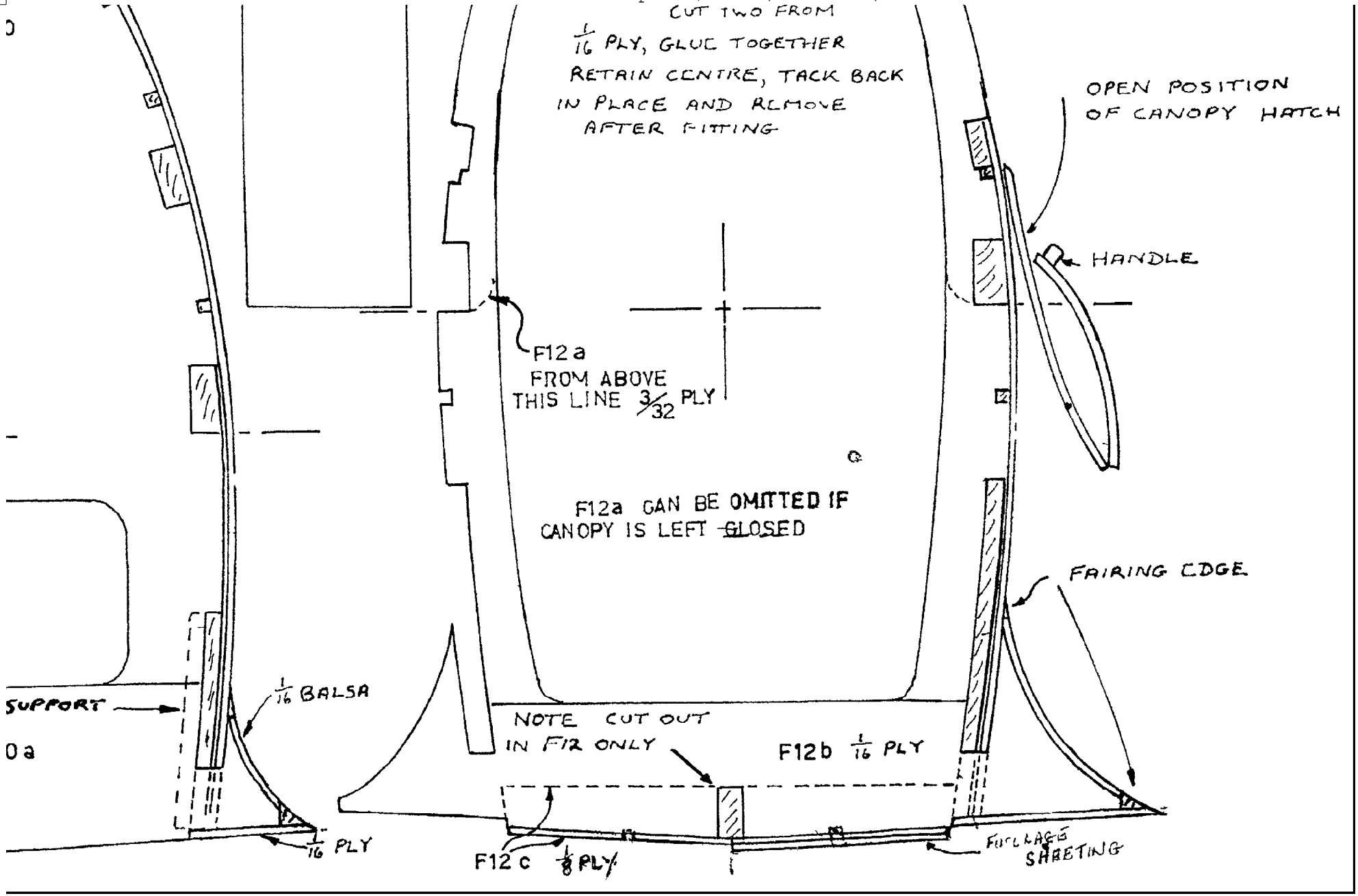
CUT TWO FROM
1/16 PLY, GLUE TOGETHER
RETAIN CENTRE, TACK BACK
IN PLACE AND REMOVE
AFTER FITTING
OPEN POSITION
OF CANOPY HATCH
HANDLE
F12a
FROM ABOVE
THIS LINE 3/32 PLY
F12a CAN BE OMITTED IF
CANOPY IS LEFT CLOSED
FAIRING EDGE
SUPPORT
1/16 BALSA
NOTE CUT OUT
IN F12 ONLY
F12b 1/16 PLY
1/16 PLY
F12c 1/8 PLY
FUSELAGE
SHEETING

FAIREY FIREFLY V.

C A.P. W HIGH ST.
EARLSTON,
BERWICKSHIRE.

1-2-74

DESIGNED & DRAWN BY
A RICHARDSON,
& B YEARDLEY.

SHEET 2 OF 2

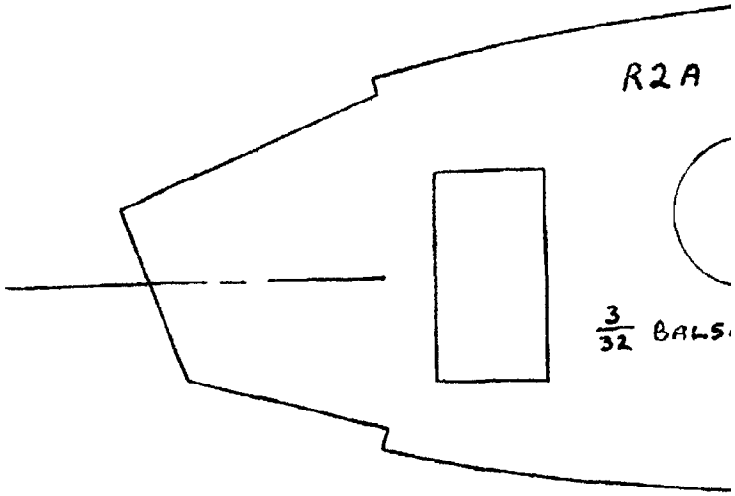

MAKE 2 OF ALL RIBS
EXCEPT R1

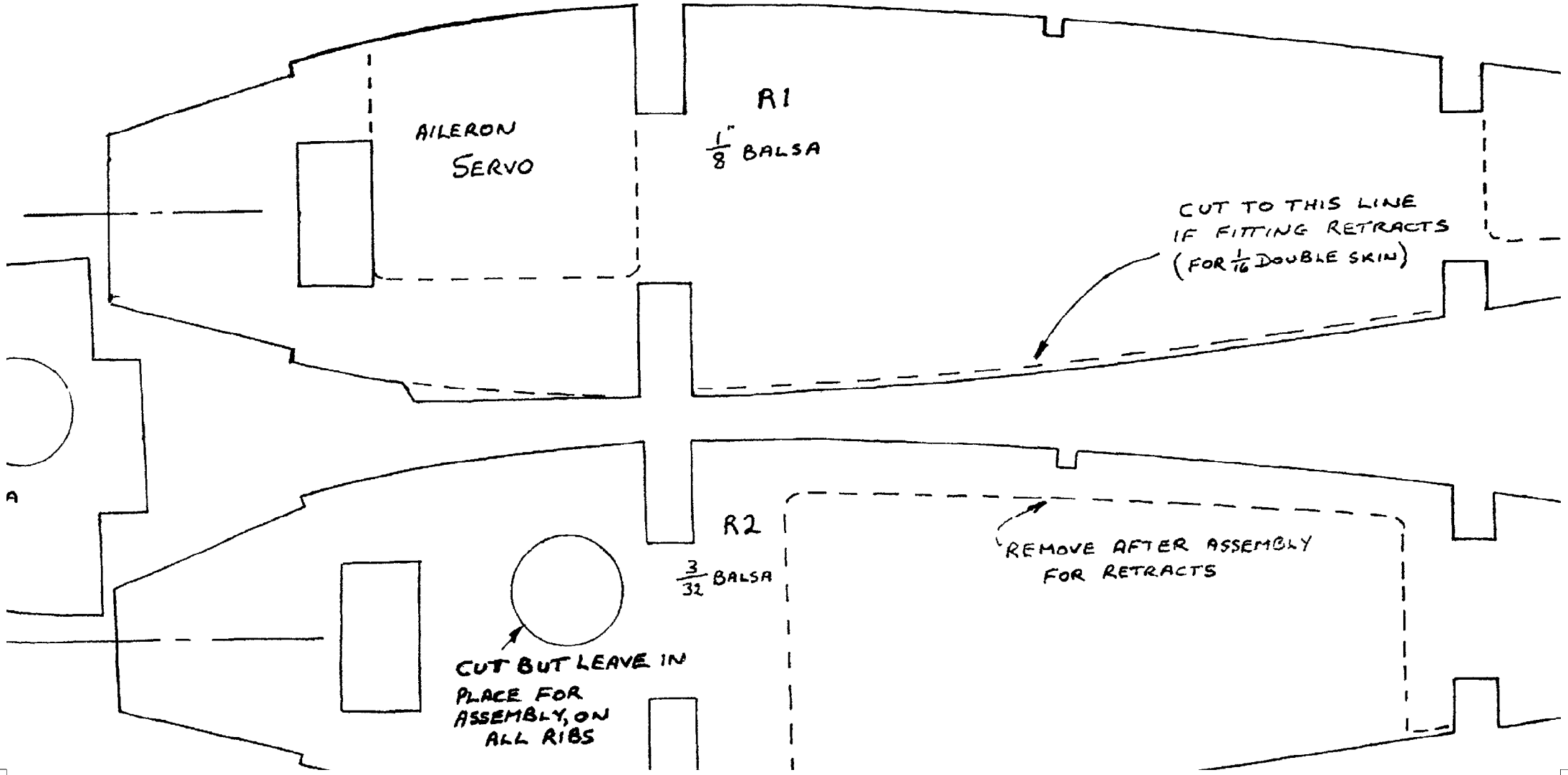
AILERON
SERVO
R1
1/8" BALSA
CUT TO THIS LINE
IF FITTING RETRACTS
(FOR 1/16 DOUBLE SKIN)
R2
3/32 BALSA
REMOVE AFTER ASSEMBLY
FOR RETRACTS
CUT BUT LEAVE IN
PLACE FOR
ASSEMBLY, ON
ALL RIBS

BEND

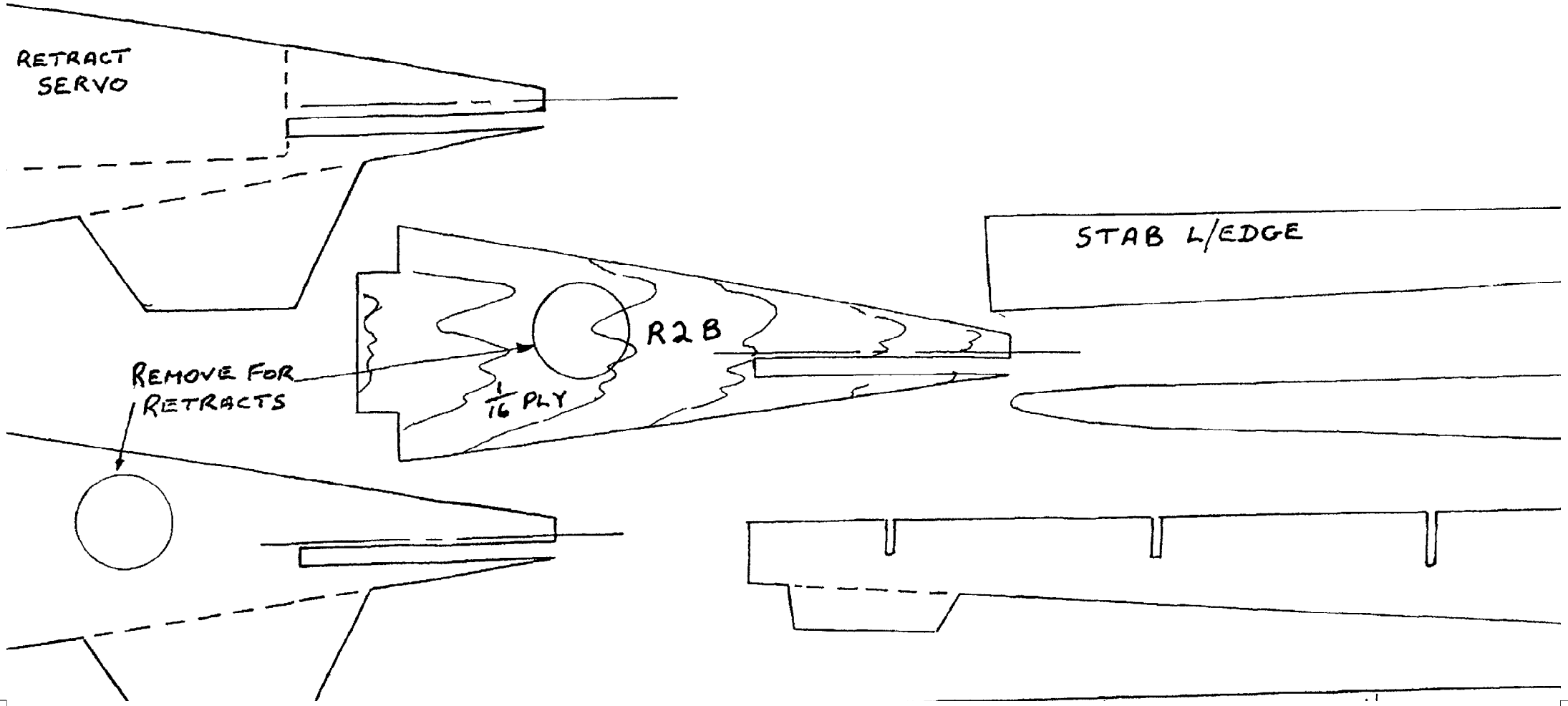

) U/C LEG TO THIS SHAPE TO ENSURE CORRECT EXTENSION + RETRACTION ANGLES

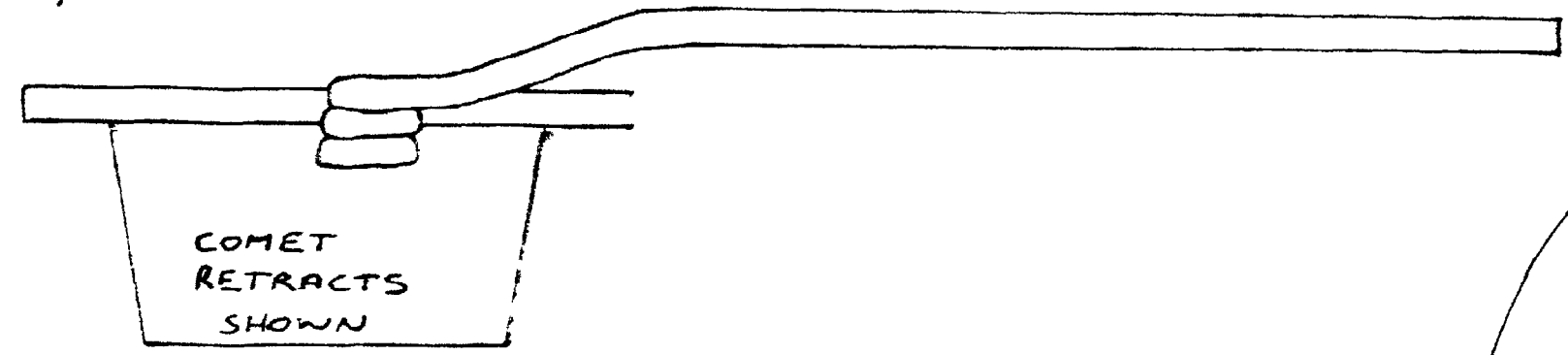

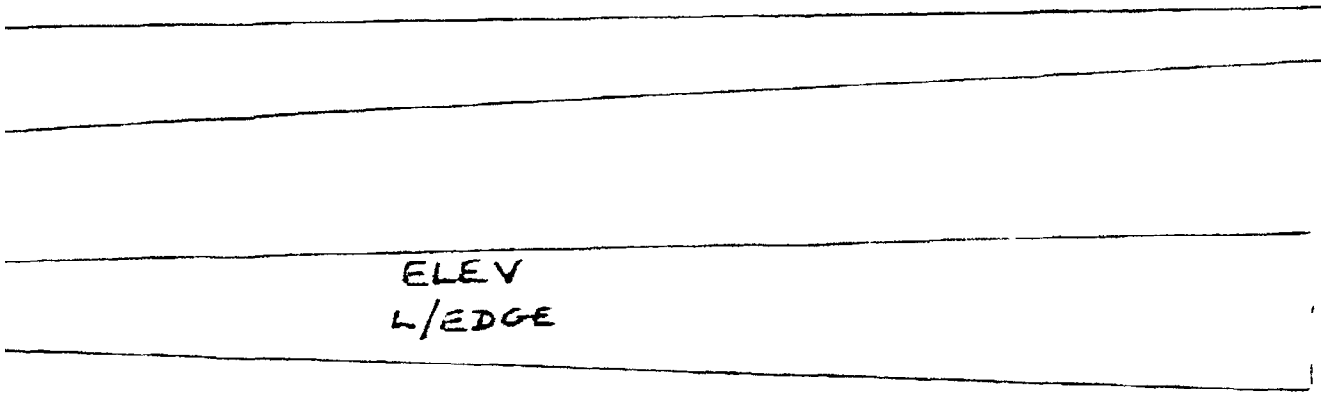

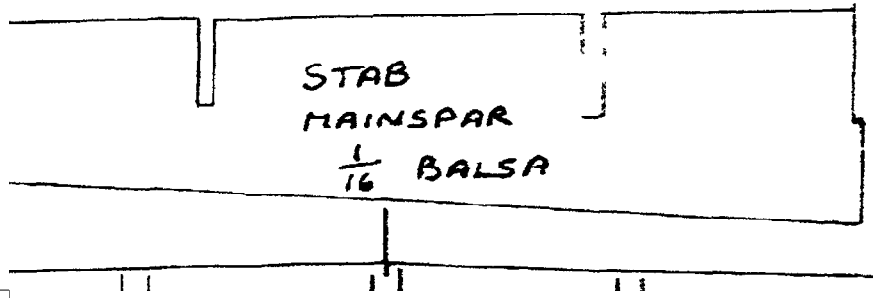

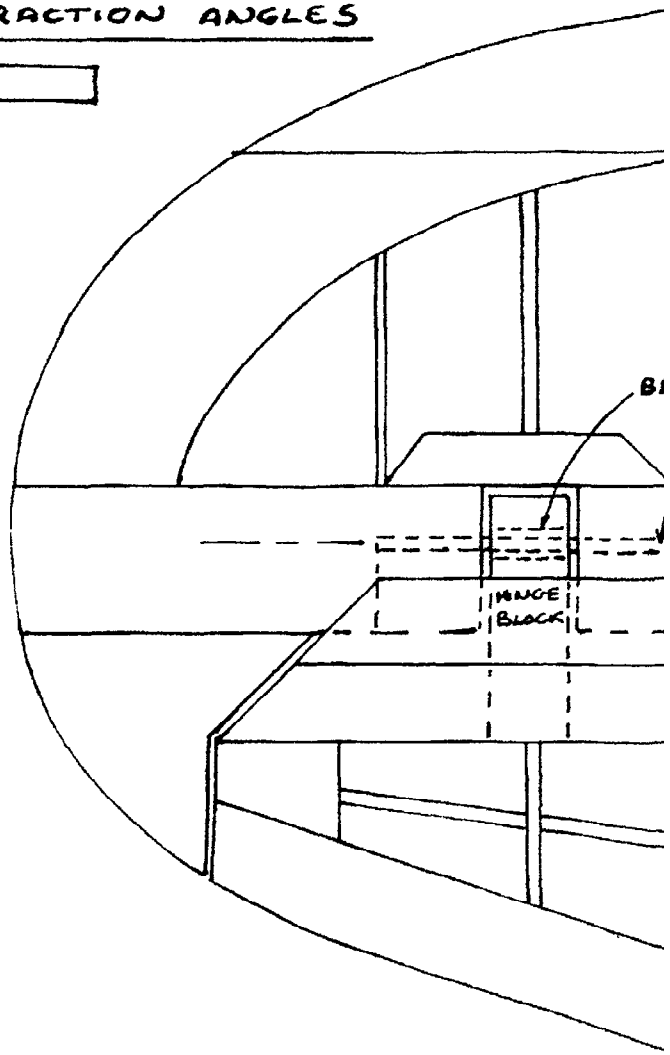

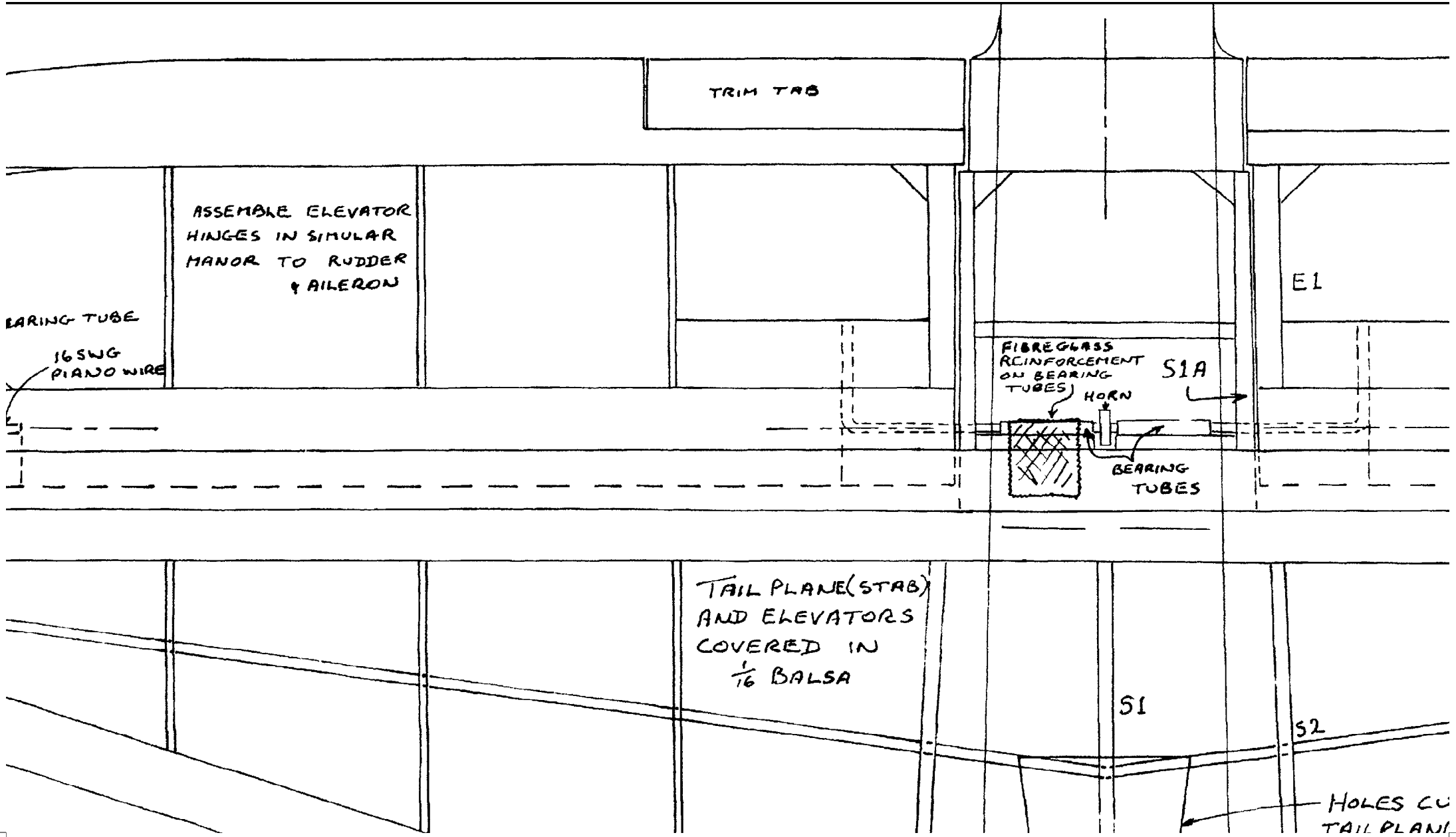
TRIM TAB
ASSEMBLE ELEVATOR HINGES IN SIMULAR MANOR TO RUDDER & AILERON
E1
BARING TUBE
16 SWG PIANO WIRE
FIBREGLASS RCINFORCEMENT ON BEARING TUBES
S1A
HORN
BEARING TUBES
TAIL PLANE (STAB) AND ELEVATORS COVERED IN 1/16 BALSA
S1
S2
HOLES CU
TAIL PLANE

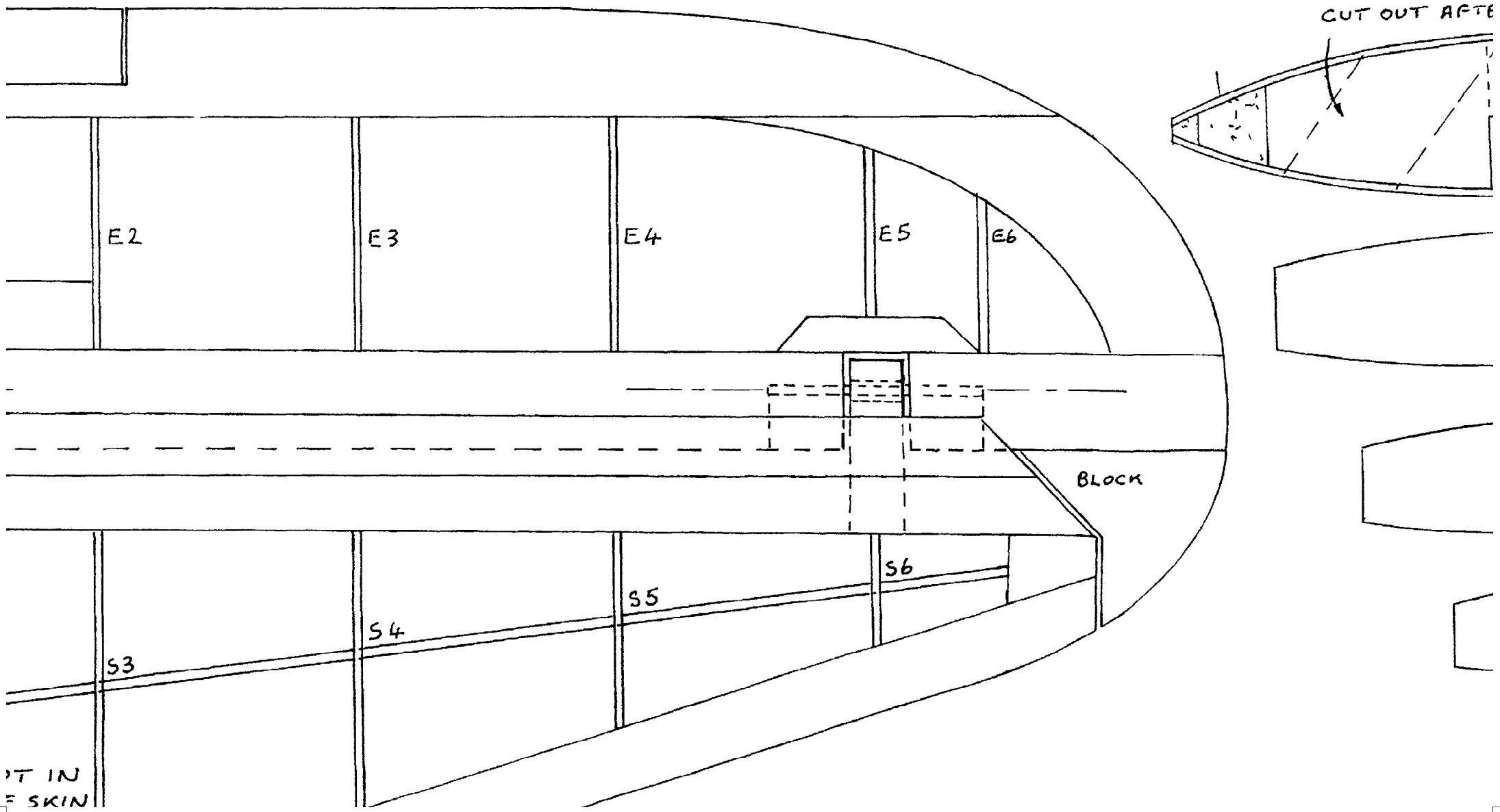
CUT OUT AFTE
E2
E3
E4
E5
E6
BLOCK
S3
S4
S5
S6
T IN
SKIN

ER ASSEMBLY

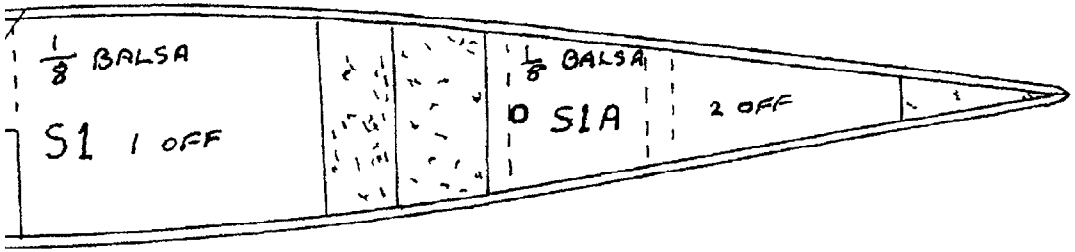

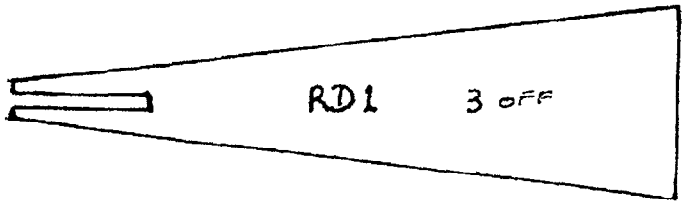

ALL RUDDER + FIN RIBS ARE 1/16 BALSA

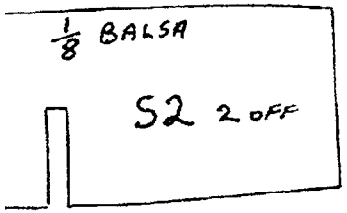

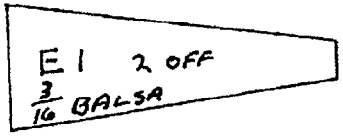

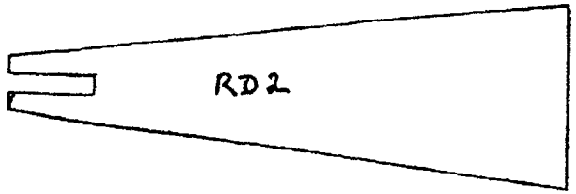

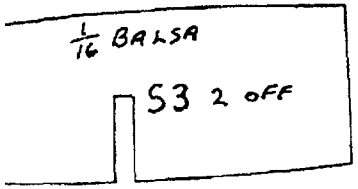

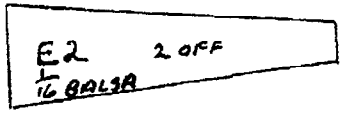

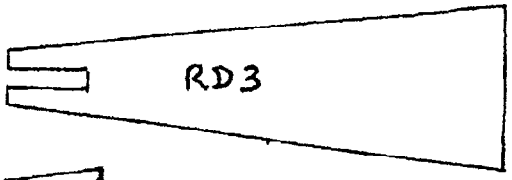

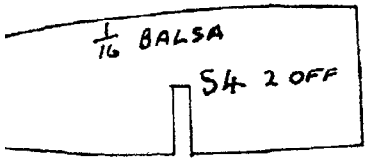

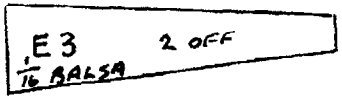

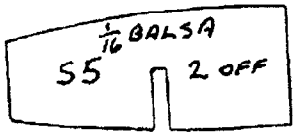

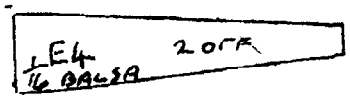

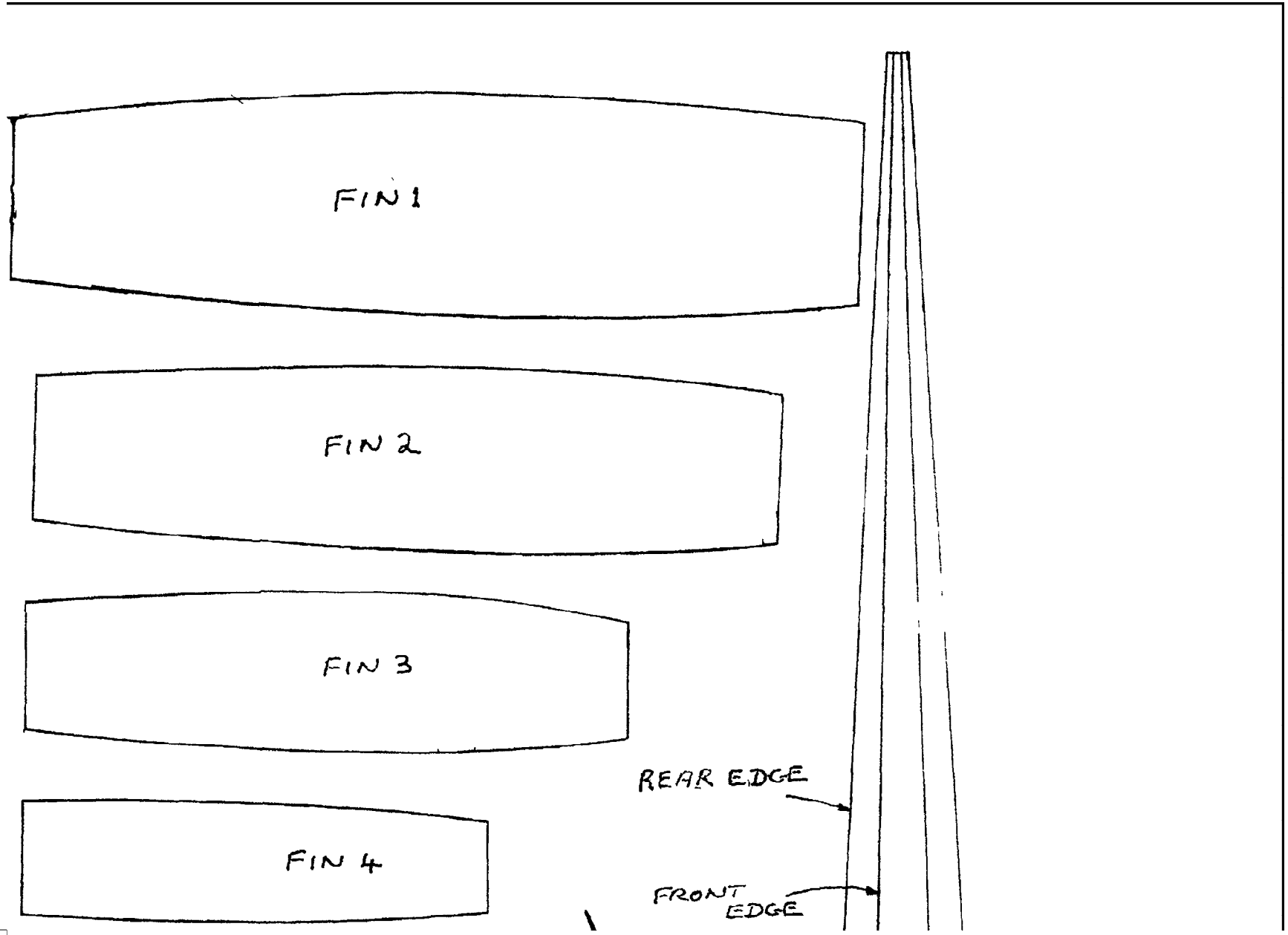
FIN 1
FIN 2
FIN 3
FIN 4
REAR EDGE
FRONT EDGE

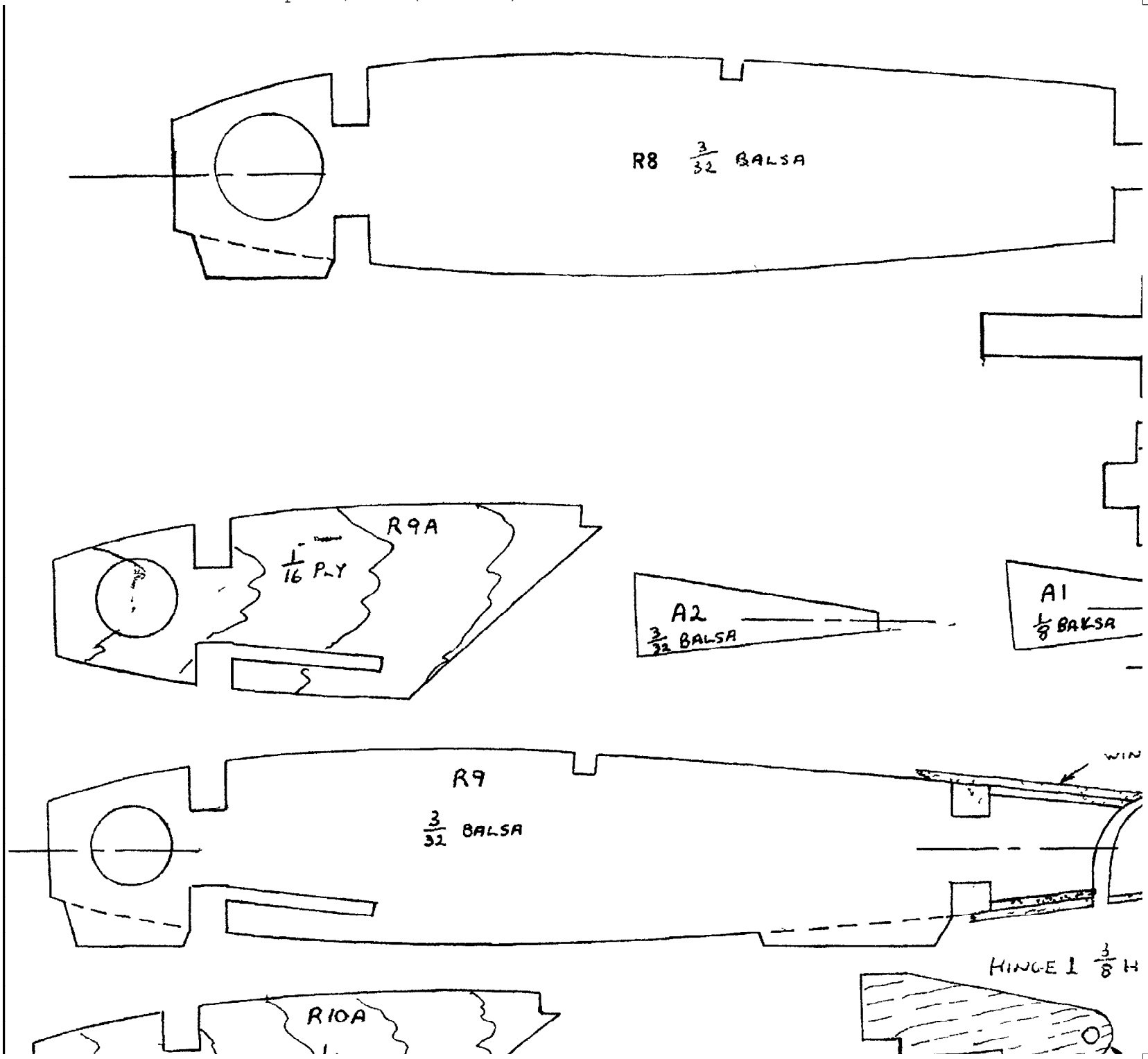
R8 3/32 BALSA
R9A
1/16 PLY
A2
3/32 BALSA
A1
1/8 BALSA
R9
3/32 BALSA
HINGE 1 3/8 H
R10A

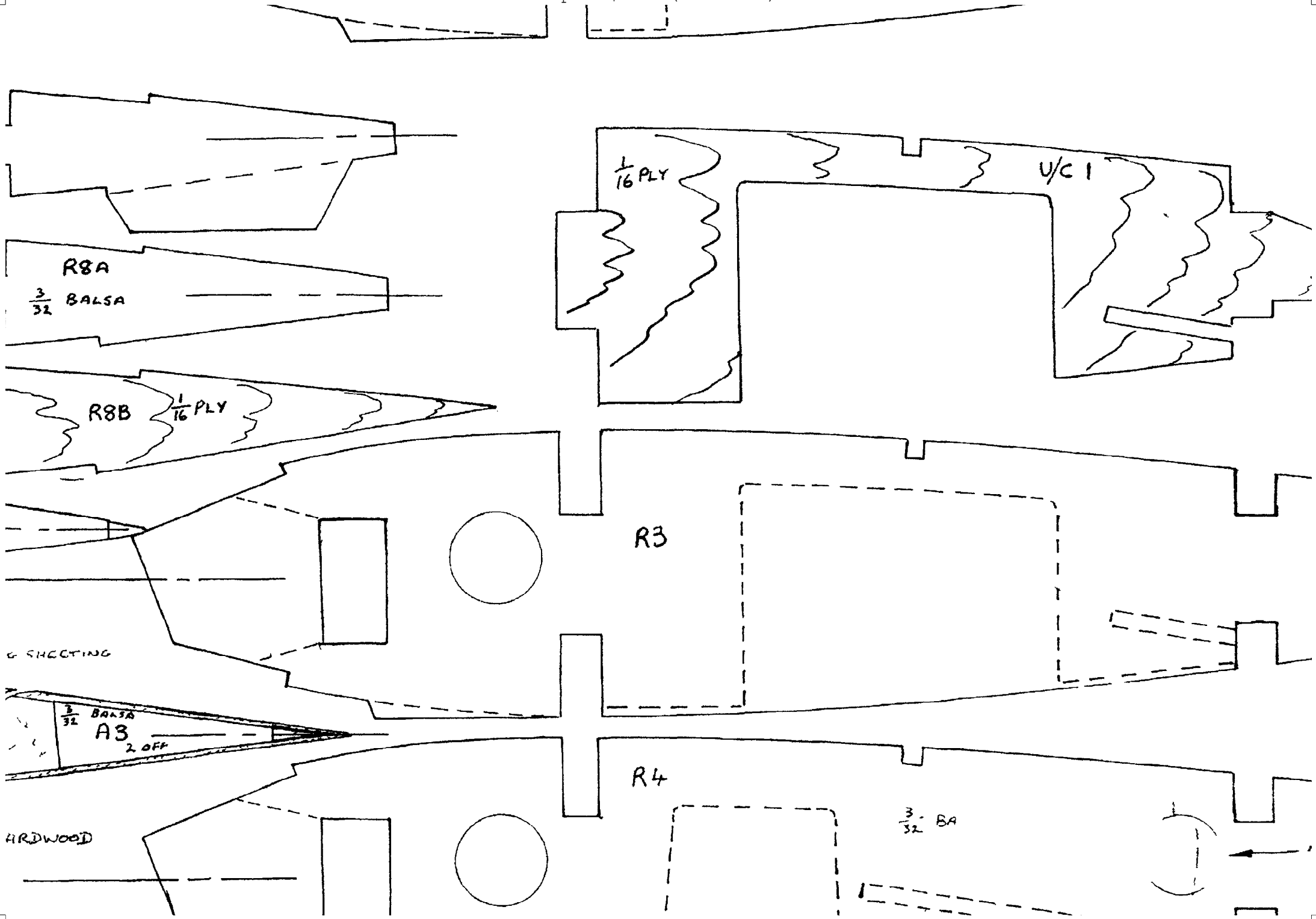
1/16 PLY
U/C 1
R8A
3/32 BALSA
R8B
1/16 PLY
R3
SHEETING
3/32 BALSA
A3
2 OFF
R4
3/32 BA
HARDWOOD

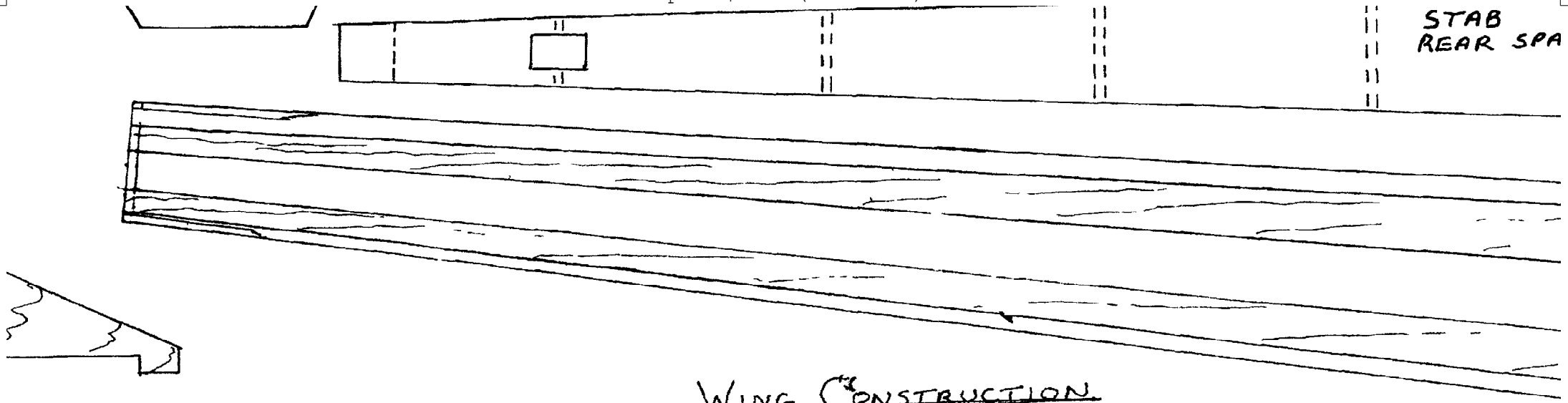

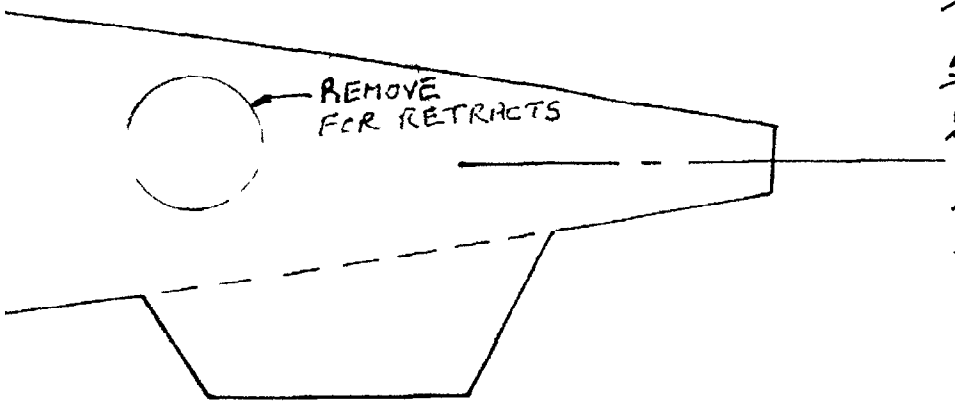

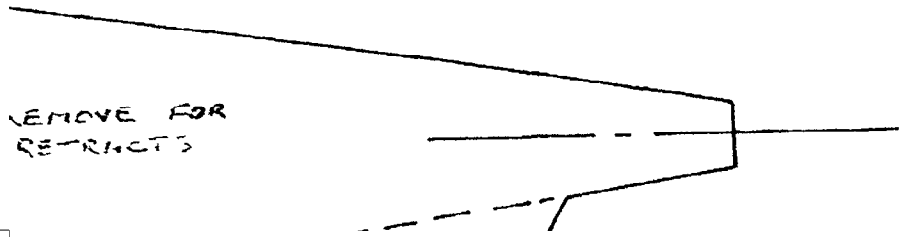

WING CONSTRUCTION

1. CUT ALL RIBS SPARS + BRACES
2. STICK PLY U/C RIBS + 'A' RIBS TO APPROPRIATE WING ROUGH
3. CUT BLOCK FAIRINGS AT RAD INTAKE ENDS SHAPE + STICK TO R2A + R5A
4. POSITION ALL RIBS ON PLAN, WITH U/C MOUNTING PLAT IN POSITION, + INSERT TOP MAIN-SPAR
5. EPOXY U/C PLATES + BELLCRANK PLATES IN F
6. ARRANGE ALL RIBS IN POSITION ON PLAN + MAIN-SPAR JOINTS + PIN
7. SLIDE R2A + R5A ONTO L/E + GLUE L/E TO RIBS
8. FIT ALL TOP SPARS, T/E WING TIPS ETC
9. REMOVE WING FROM PLAN + FIT ALL DOUBLE SIMULAR WAY
10. JOIN WINGS IN USUAL WAY AND SHEET + F
11. WING TANKS CAN BE MADE FROM POLYSTYRENE

NOTE

FIT U/C BEFORE SHEETING WING

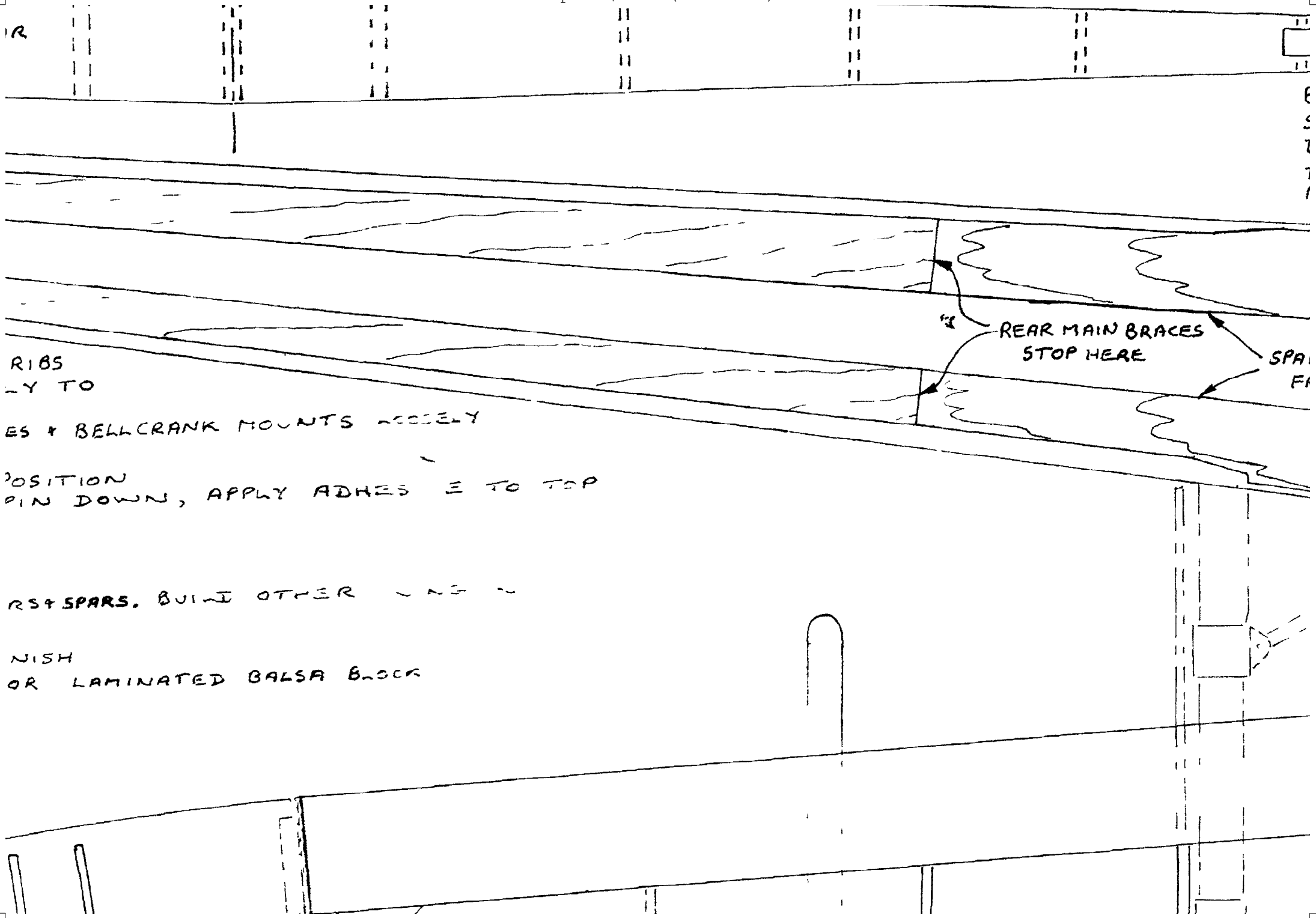
REAR MAIN BRACES
STOP HERE
RIBS
ES & BELLCRANK MOUNTS
POSITION
PIN DOWN, APPLY ADHES E TO TOP
RS & SPARS. BUILT OTHER
NISH
OR LAMINATED BALSA BLOCK

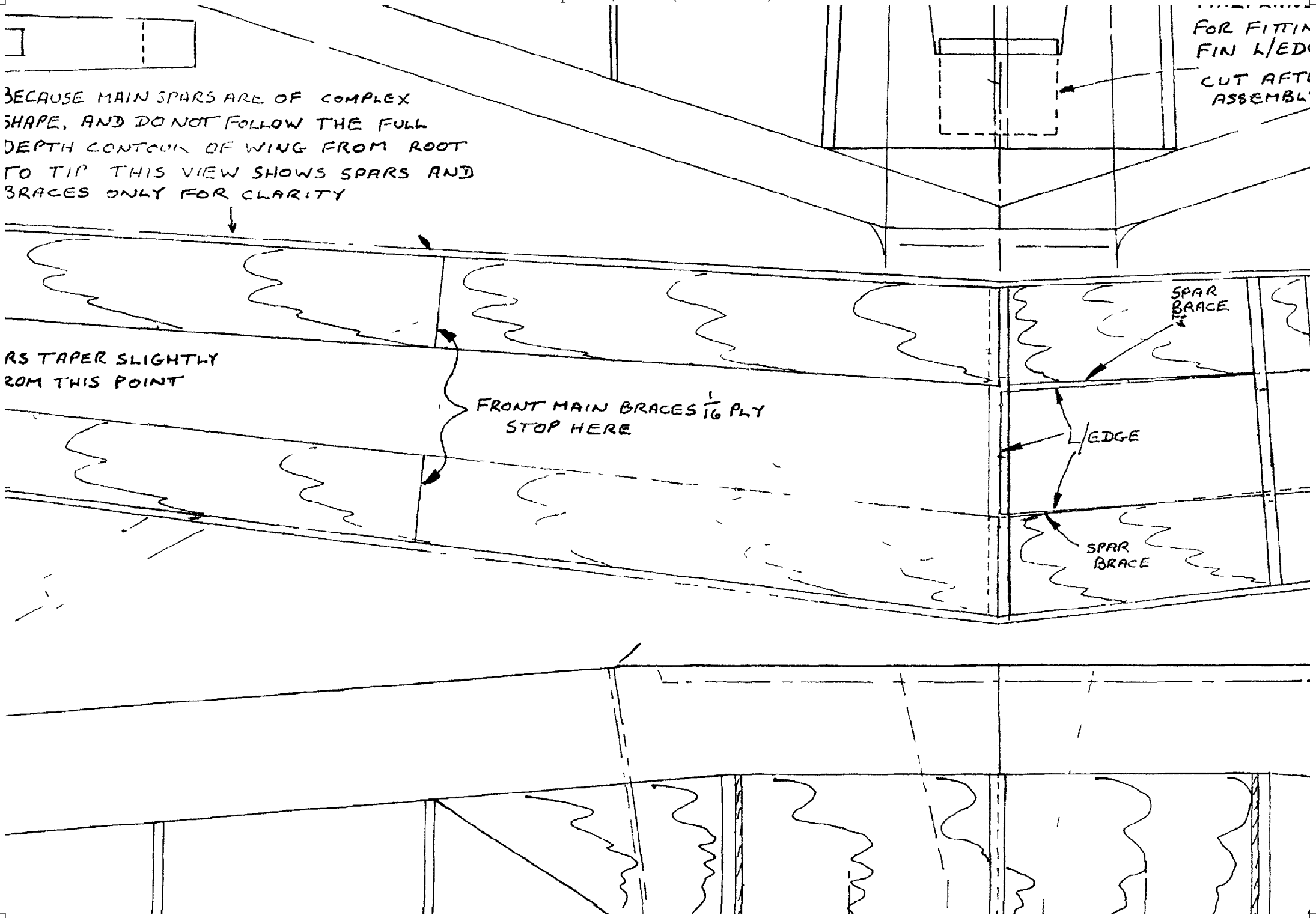
BECAUSE MAIN SPARS ARE OF COMPLEX
SHAPE, AND DO NOT FOLLOW THE FULL
DEPTH CONTOUR OF WING FROM ROOT
TO TIP THIS VIEW SHOWS SPARS AND
BRACES ONLY FOR CLARITY
RS TAPER SLIGHTLY
ROM THIS POINT
FRONT MAIN BRACES 1/16 PLY
STOP HERE
SPAR
BRACE
L/EDGE
SPAR
BRACE
FOR FITTIN
FIN L/ED
CUT AFT
ASSEMBL

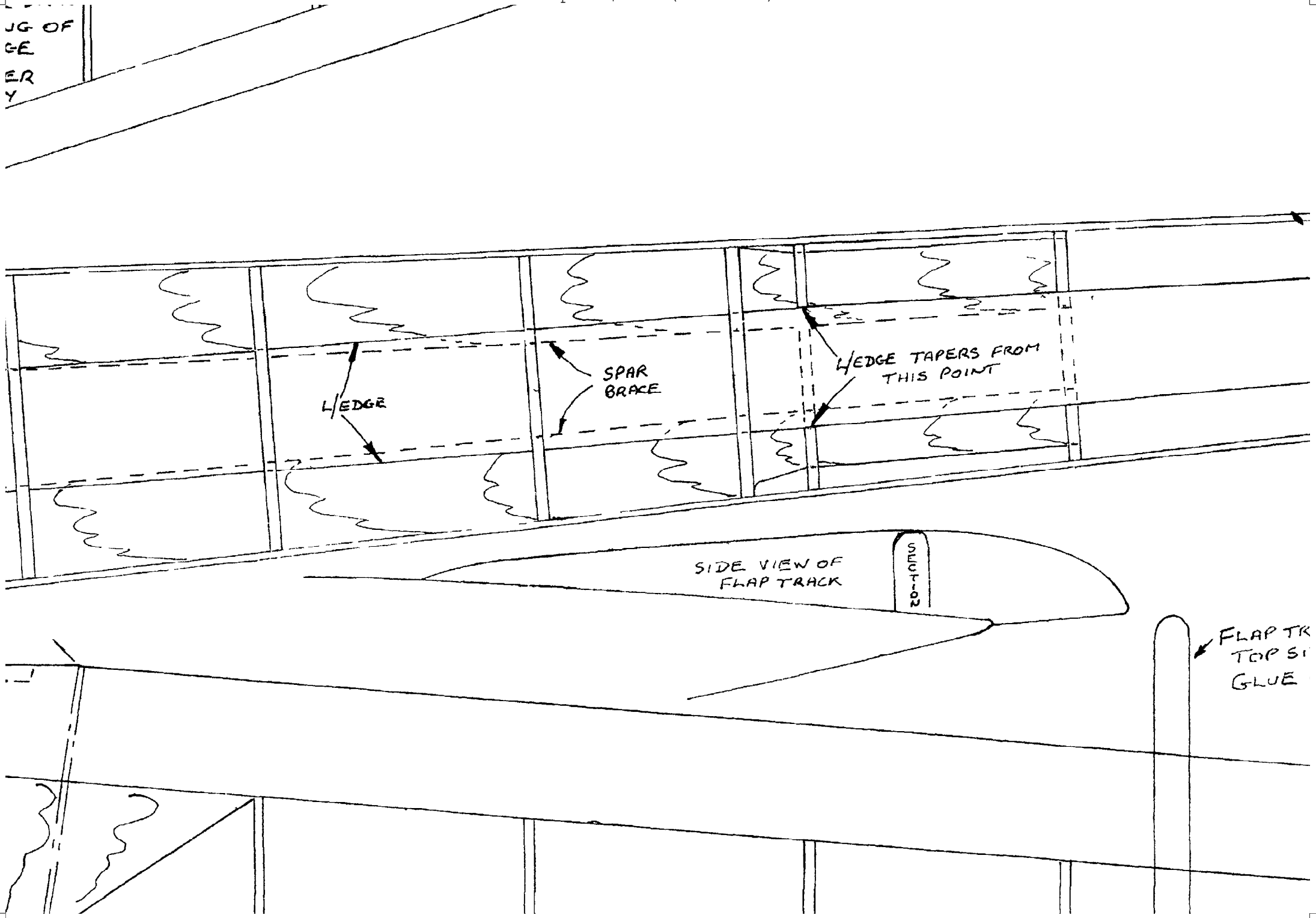
JG OF
GE
ER
Y
L/EDGE
SPAR
BRACE
L/EDGE TAPERS FROM
THIS POINT
SIDE VIEW OF
FLAP TRACK
SECTION
FLAP TR
TOP SI
GLUE

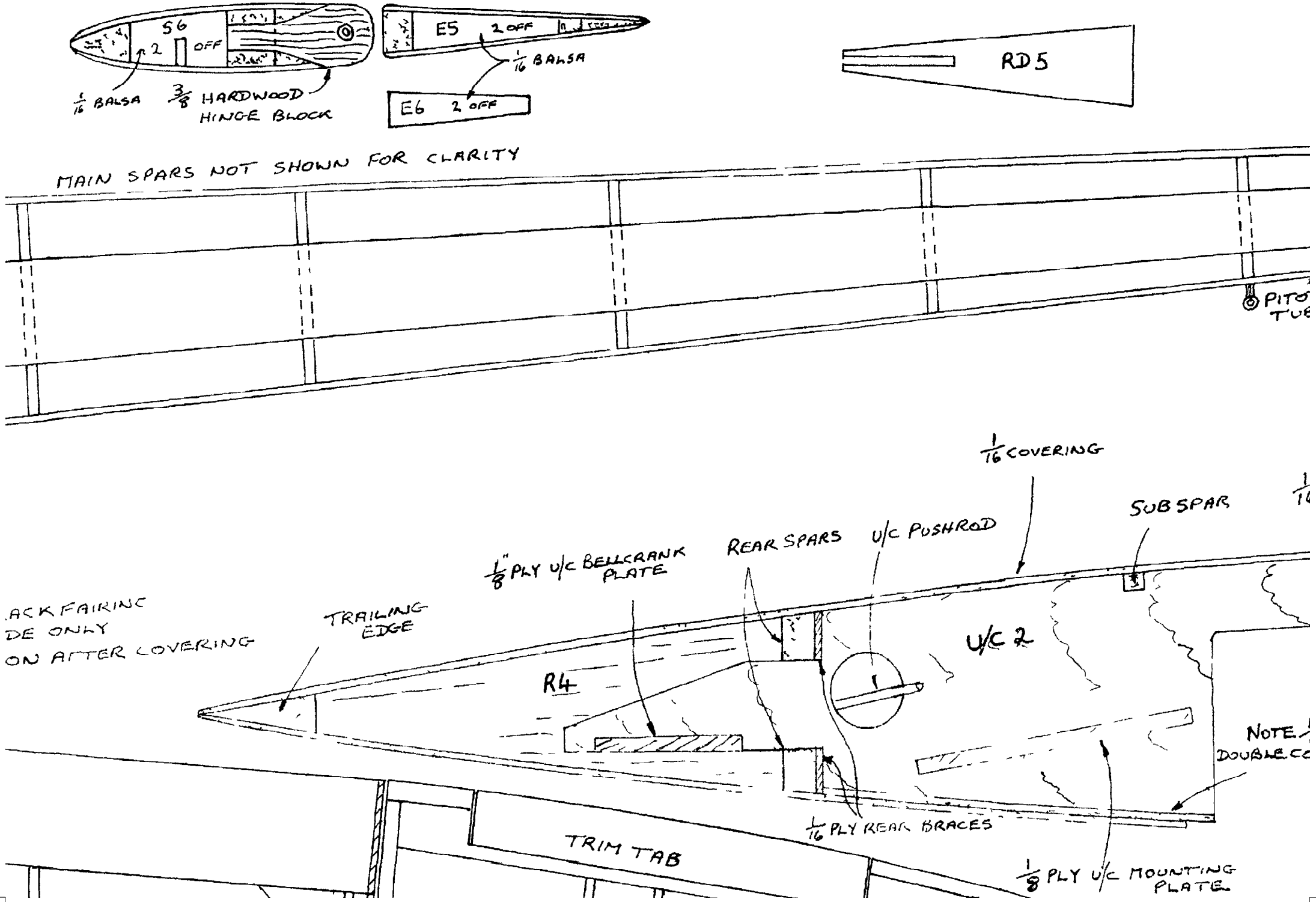
S6
2 OFF
1/16 BALSA
3/8 HARDWOOD HINGE BLOCK
E5 2 OFF
1/16 BALSA
E6 2 OFF
RD5
MAIN SPARS NOT SHOWN FOR CLARITY
PITOT TUBE
1/16 COVERING
SUB SPAR
REAR SPARS
U/C PUSHROD
1/8" PLY U/C BELLCRANK PLATE
TRAILING EDGE
U/C 2
R4
NOTE DOUBLE CO
1/16 PLY REAR BRACES
TRIM TAB
1/8 PLY U/C MOUNTING PLATE

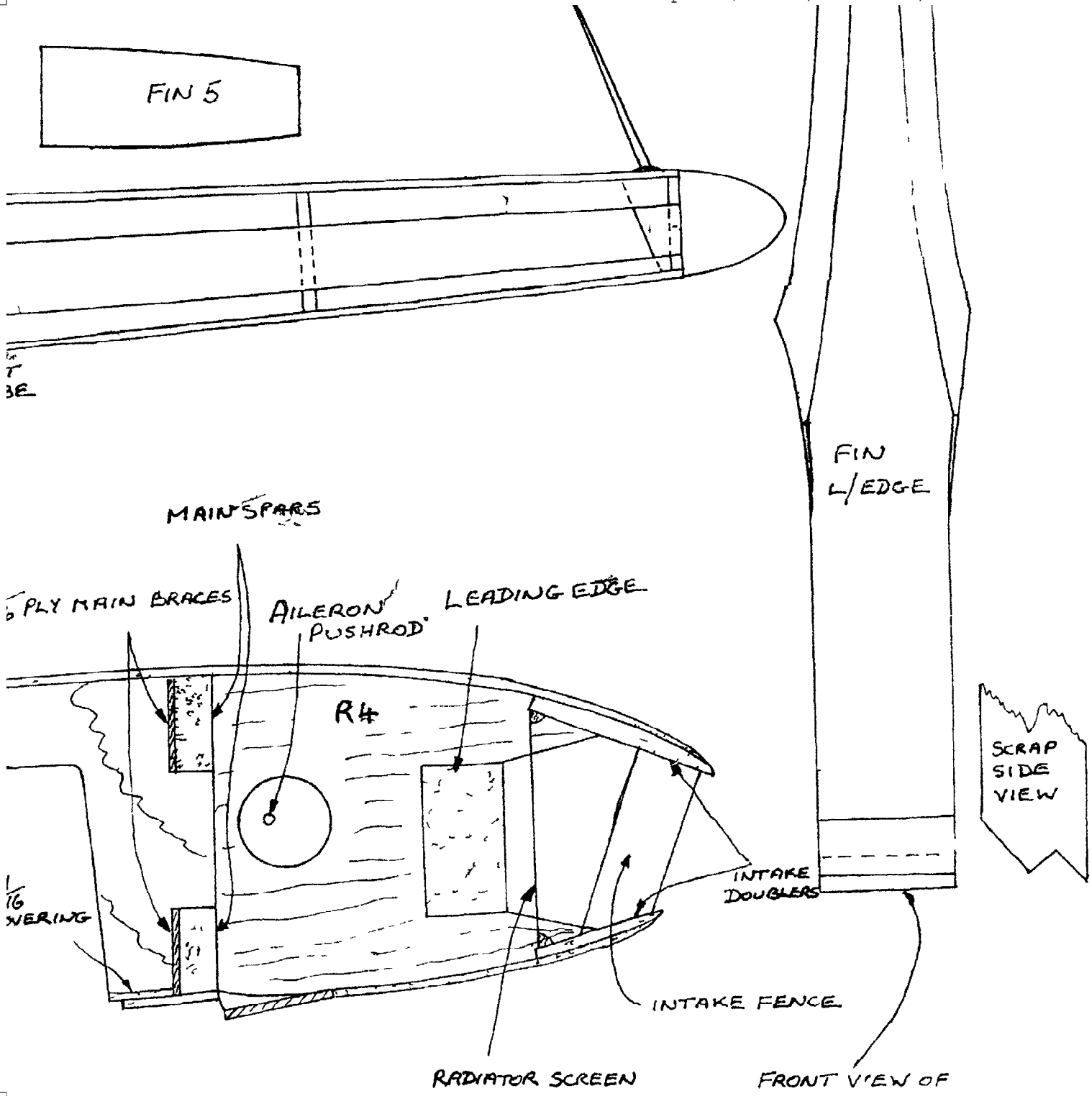
FIN 5
MAIN SPARS
PLY MAIN BRACES
AILERON PUSHROD
LEADING EDGE
R4
FIN L/EDGE
SCRAP SIDE VIEW
INTAKE DOUBLERS
INTAKE FENCE
RADIATOR SCREEN
FRONT VIEW OF

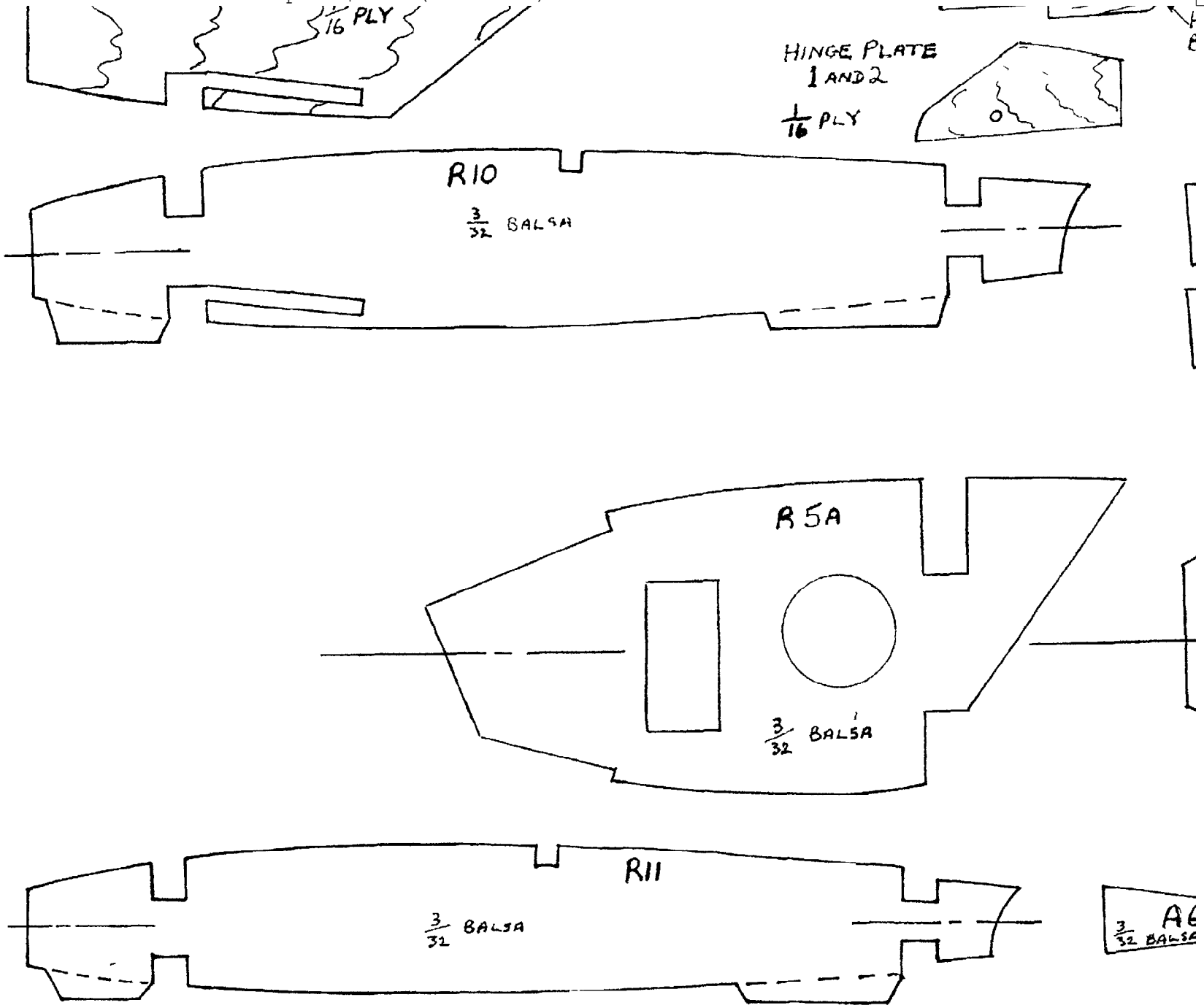
1/16 PLY
HINGE PLATE
1 AND 2
1/16 PLY
R10
3/32 BALSA
R5A
3/32 BALSA
R11
3/32 BALSA
A6
3/32 BALSA

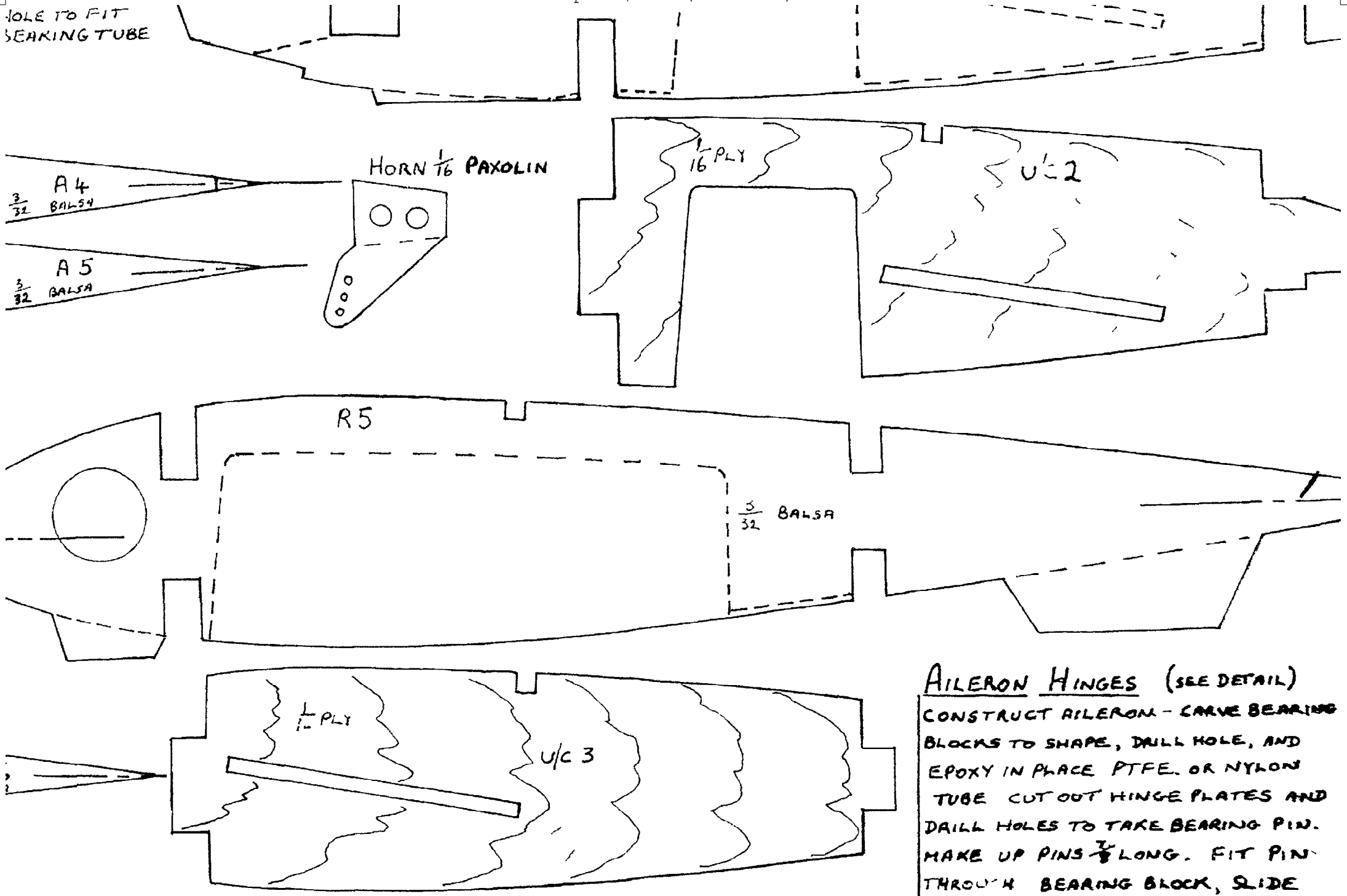

AILERON HINGES (SEE DETAIL)

CONSTRUCT AILERON - CARVE BEARING BLOCKS TO SHAPE, DRILL HOLE, AND EPOXY IN PLACE PTFE. OR NYLON TUBE CUT OUT HINGE PLATES AND DRILL HOLES TO TAKE BEARING PIN. MAKE UP PINS 7/8 LONG. FIT PIN THROUGH BEARING BLOCK, SLIDE SPACER WASHER ON EACH SIDE

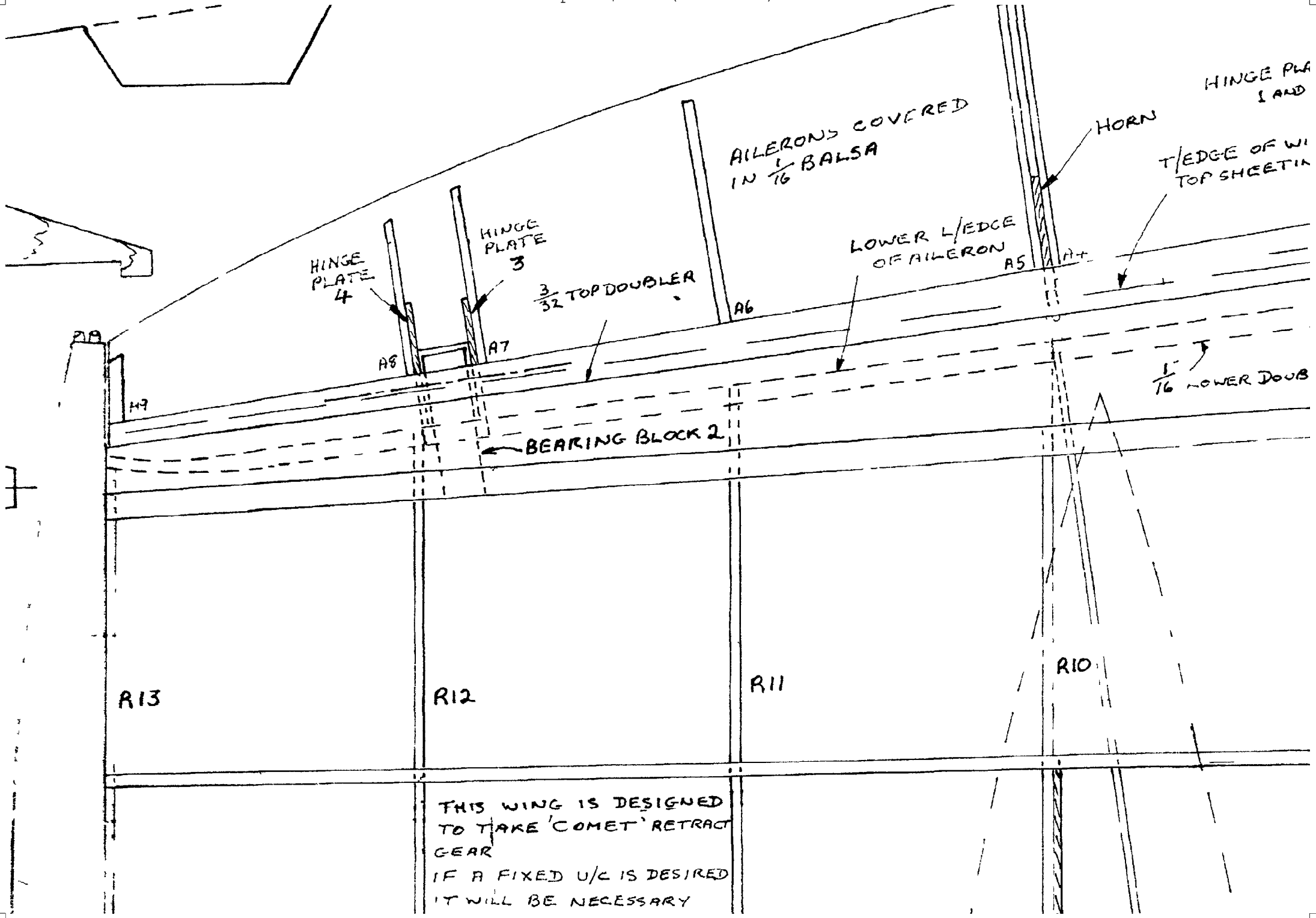
HINGE PLA
1 AND
HORN
T/EDGE OF WI
TOP SHEETIN
AILERONS COVERED
IN 1/16 BALSA
HINGE
PLATE
3
HINGE
PLATE
4
3/32 TOP DOUBLER
LOWER L/EDGE
OF AILERON
A5
A6
A7
A8
A9
1/16 LOWER DOUB
BEARING BLOCK 2
R13
R12
R11
R10
THIS WING IS DESIGNED
TO TAKE 'COMET' RETRACT
GEAR
IF A FIXED U/C IS DESIRED
IT WILL BE NECESSARY

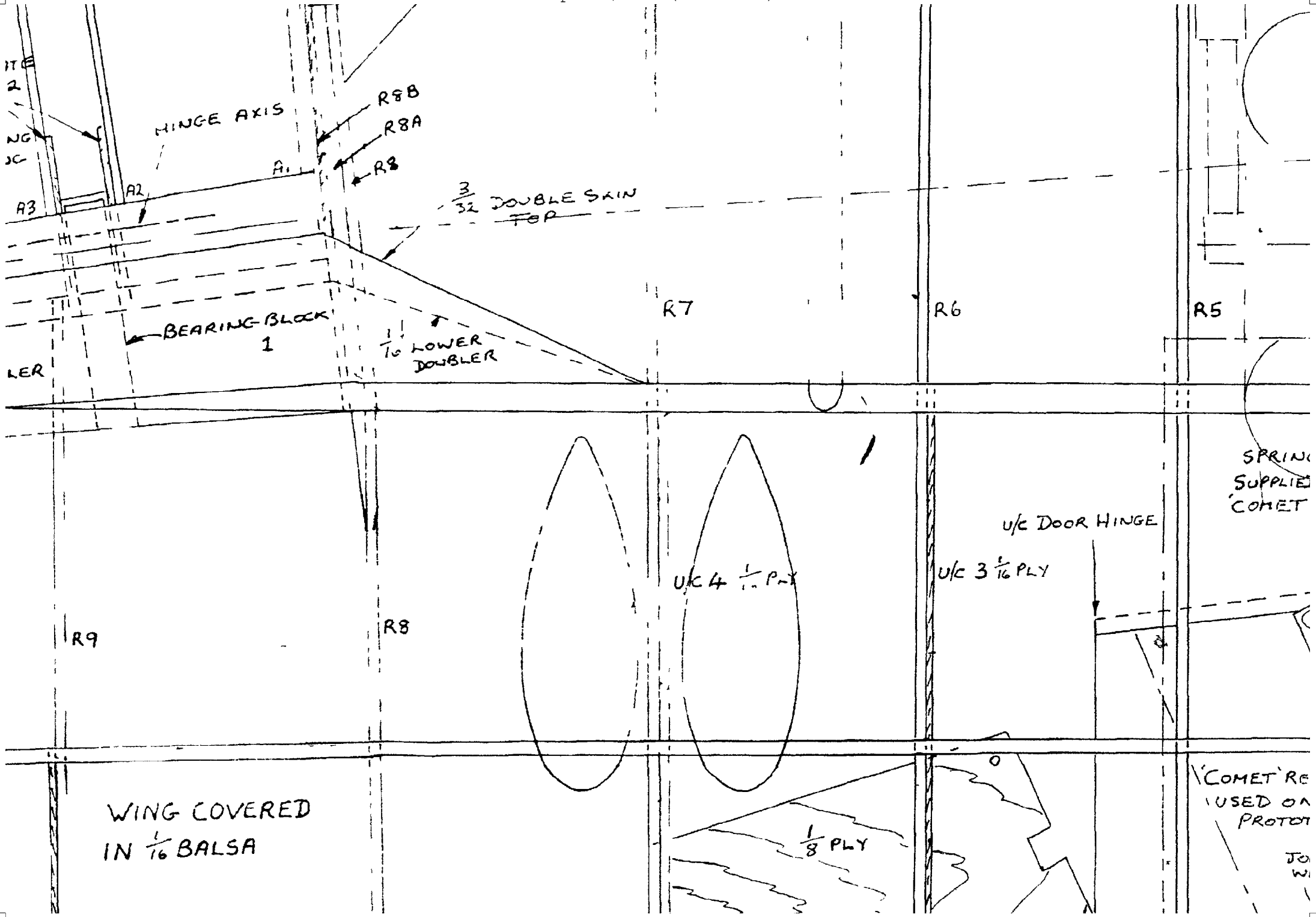
HINGE AXIS
R8B
R8A
R8
A1
A2
A3
3/32 DOUBLE SKIN TOP
BEARING BLOCK 1
1/16 LOWER DOUBLER
R7
R6
R5
R9
R8
U/C 4 1/16 PLY
U/C 3 1/16 PLY
U/C DOOR HINGE
1/8 PLY
WING COVERED IN 1/16 BALSA

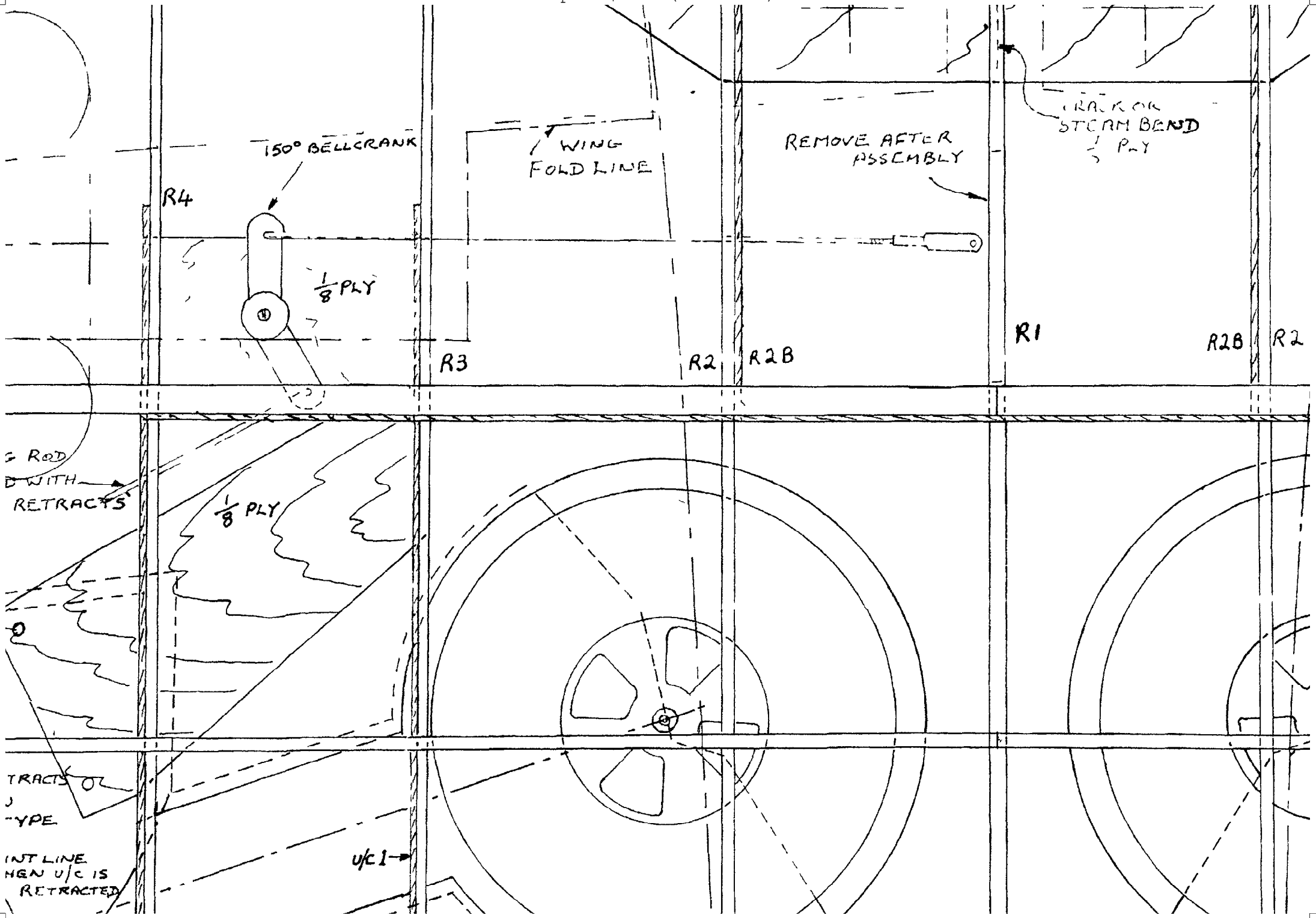
150° BELLCRANK
WING FOLD LINE
REMOVE AFTER ASSEMBLY
STEAM BEND
PLY
R4
1/8 PLY
R3
R2
R2B
R1
R2B
R2
RETRACTS
1/8 PLY
U/C 1

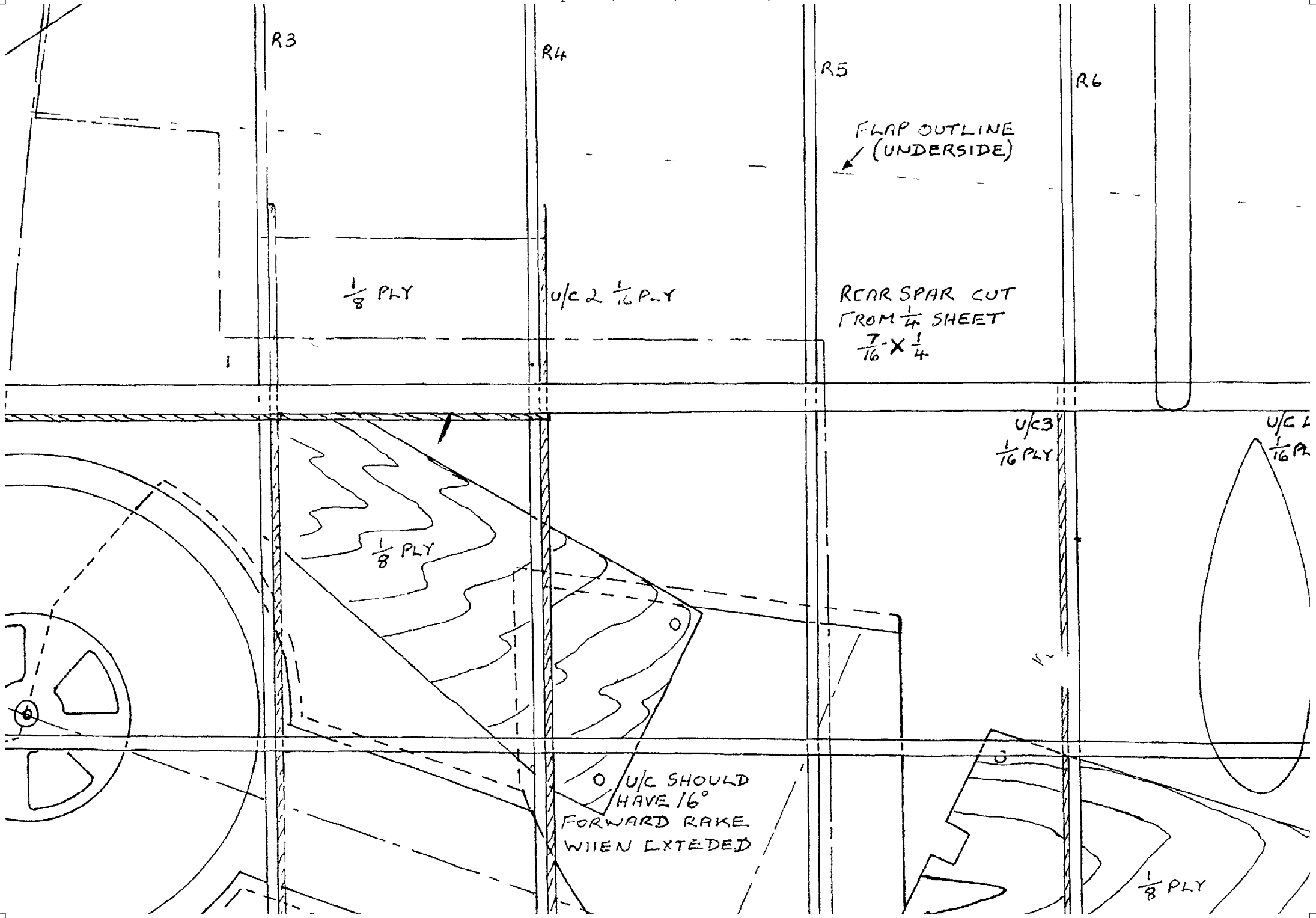
R3
R4
R5
R6
FLAP OUTLINE (UNDERSIDE)
1/8 PLY
U/C 2 1/16 PLY
REAR SPAR CUT FROM 1/4 SHEET 7/16 X 1/4
U/C3 1/16 PLY
1/8 PLY
U/C SHOULD HAVE 16° FORWARD RAKE WHEN EXTEDED
1/8 PLY

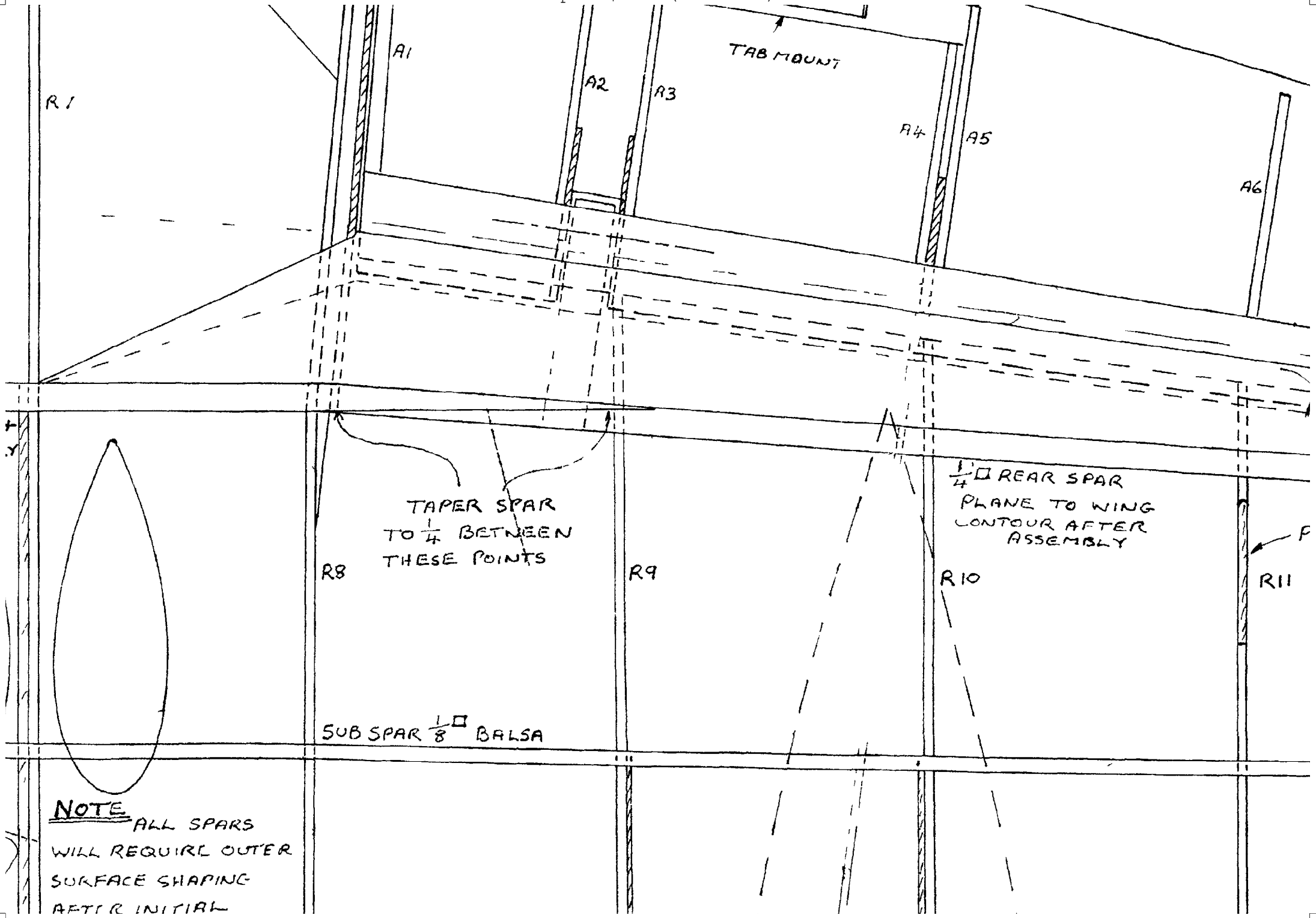
TAB MOUNT
A1
A2
R3
A4
A5
A6
R1
TAPER SPAR
TO 1/4 BETWEEN
THESE POINTS
1/4 □ REAR SPAR
PLANE TO WING
CONTOUR AFTER
ASSEMBLY
R8
R9
R10
R11
SUB SPAR 1/8 □ BALSA
NOTE ALL SPARS
WILL REQUIRE OUTER
SURFACE SHAPING
AFTER INITIAL

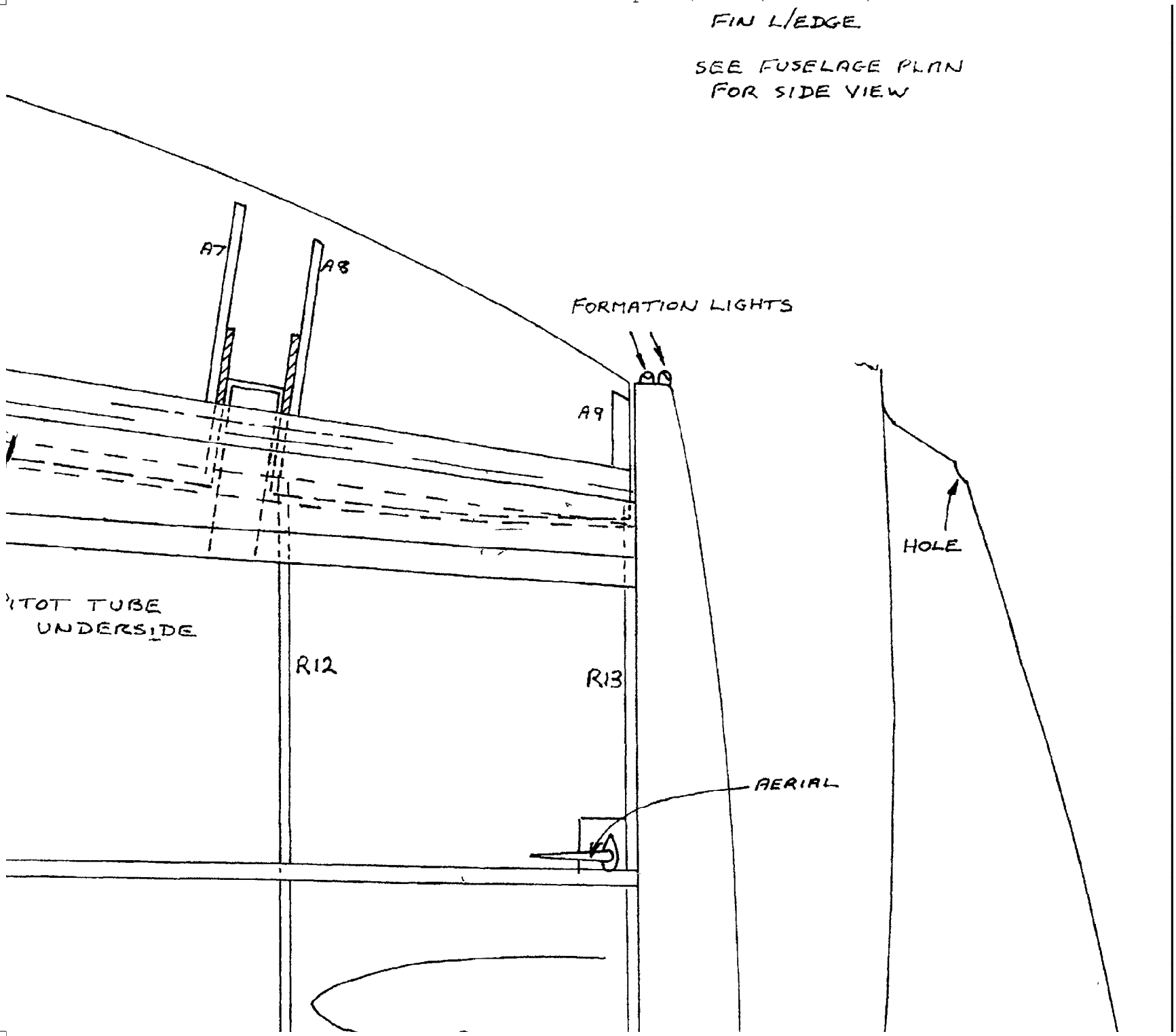
FIN L/EDGE
SEE FUSELAGE PLAN
FOR SIDE VIEW
A7
A8
FORMATION LIGHTS
A9
HOLE
ITOT TUBE
UNDERSIDE
R12
R13
AERIAL

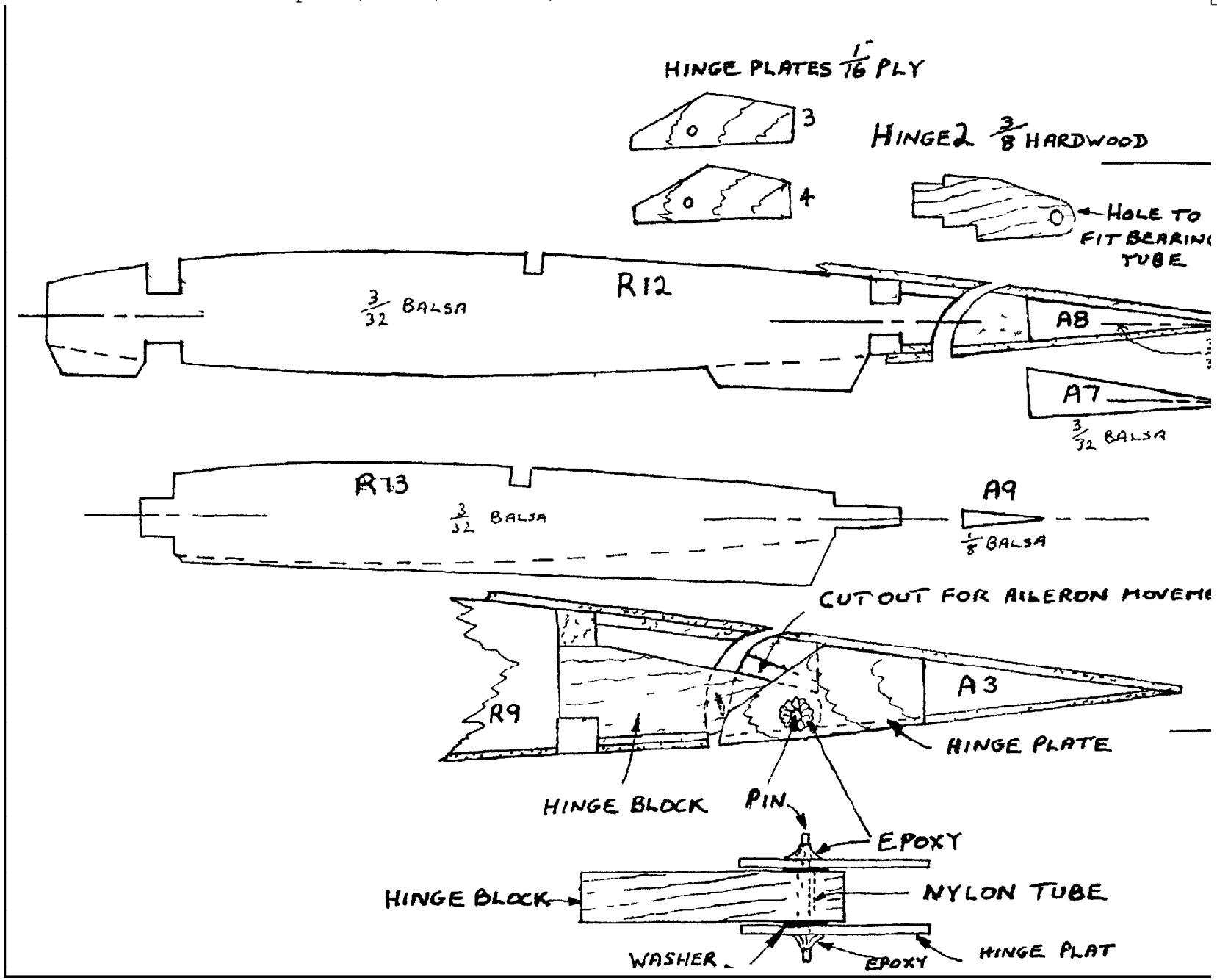
HINGE PLATES 1/16" PLY
3
4
HINGE2 3/8 HARDWOOD
HOLE TO FIT BEARING TUBE
R12
3/32 BALSA
A8
A7
3/32 BALSA
R13
3/32 BALSA
A9
1/8 BALSA
CUT OUT FOR AILERON MOVEME
R9
A3
HINGE PLATE
HINGE BLOCK
PIN
EPOXY
HINGE BLOCK
NYLON TUBE
WASHER
EPOXY
HINGE PLAT

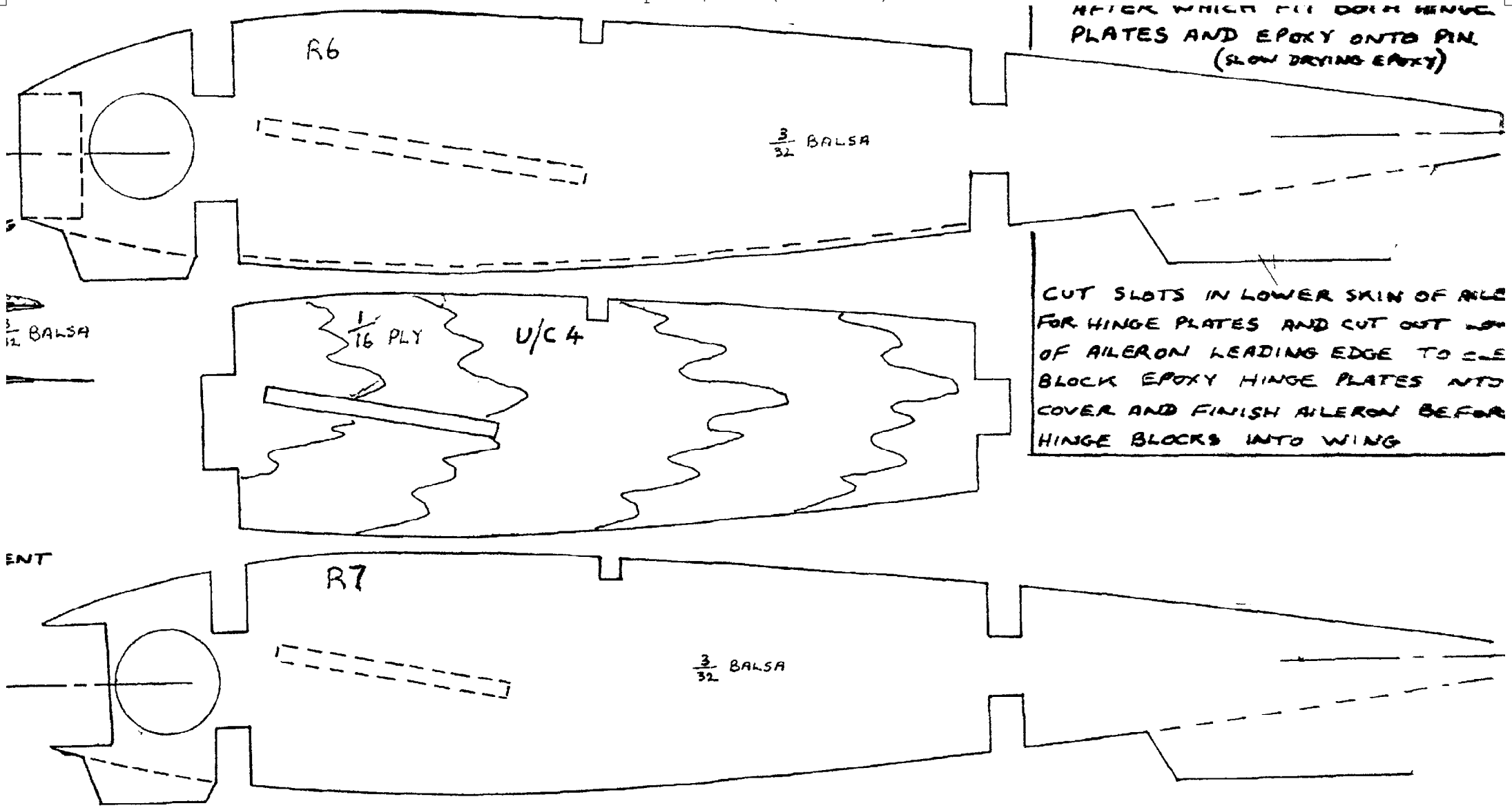
AFTER WHICH FIT BOTH HINGE
PLATES AND EPOXY ONTO PIN
(SLOW DRYING EPOXY)
R6
3/32 BALSA
CUT SLOTS IN LOWER SKIN OF AILE
FOR HINGE PLATES AND CUT OUT
OF AILERON LEADING EDGE TO
BLOCK EPOXY HINGE PLATES INTO
COVER AND FINISH AILERON BEFOR
HINGE BLOCKS INTO WING
1/16 PLY
U/C 4
R7
3/32 BALSA

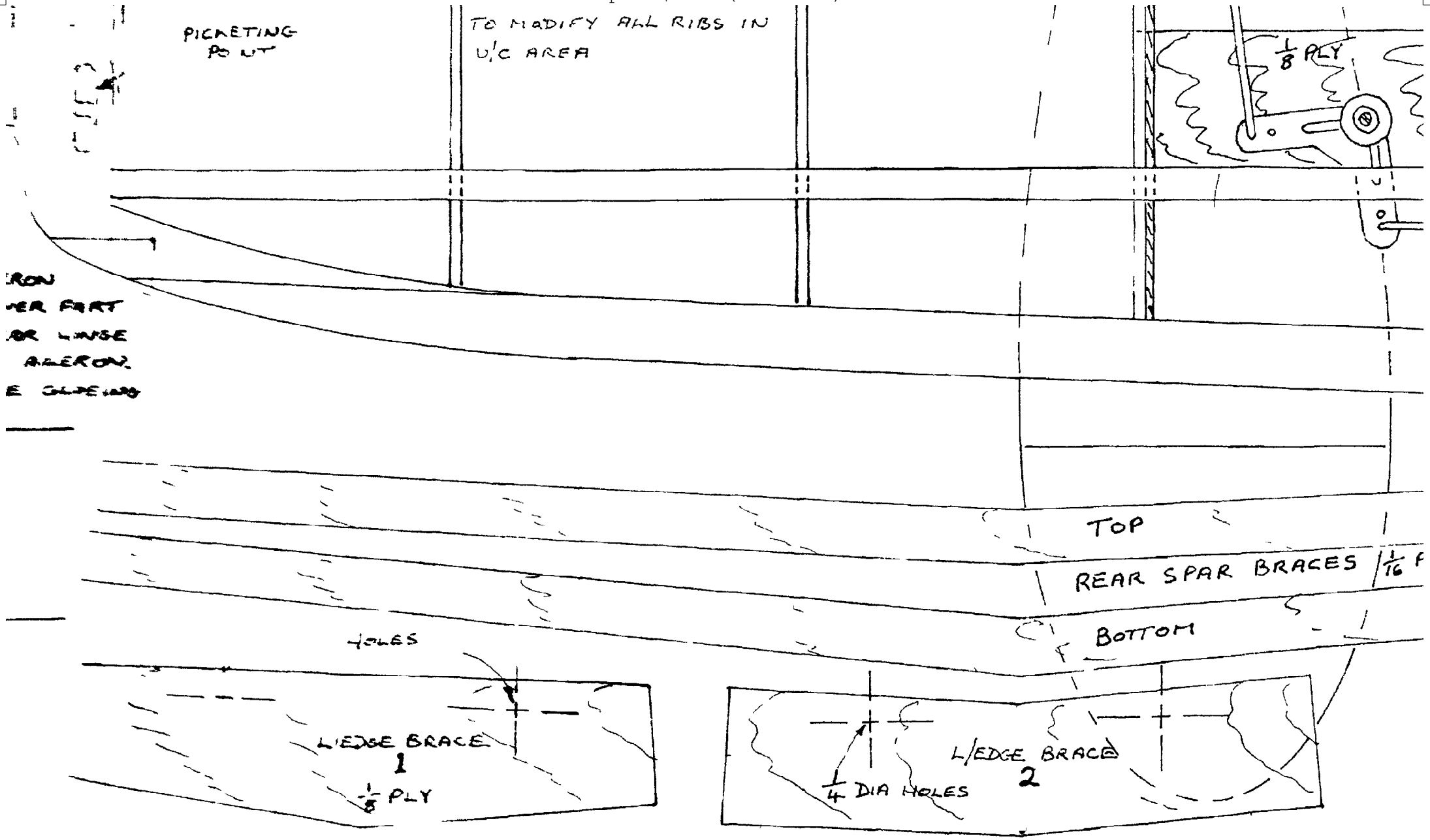
PICKETING POINT
TO MODIFY ALL RIBS IN U/C AREA
1/8 PLY
TOP
REAR SPAR BRACES
BOTTOM
HOLES
L/EDGE BRACE 1
1/8 PLY
L/EDGE BRACE 2
1/4 DIA HOLES

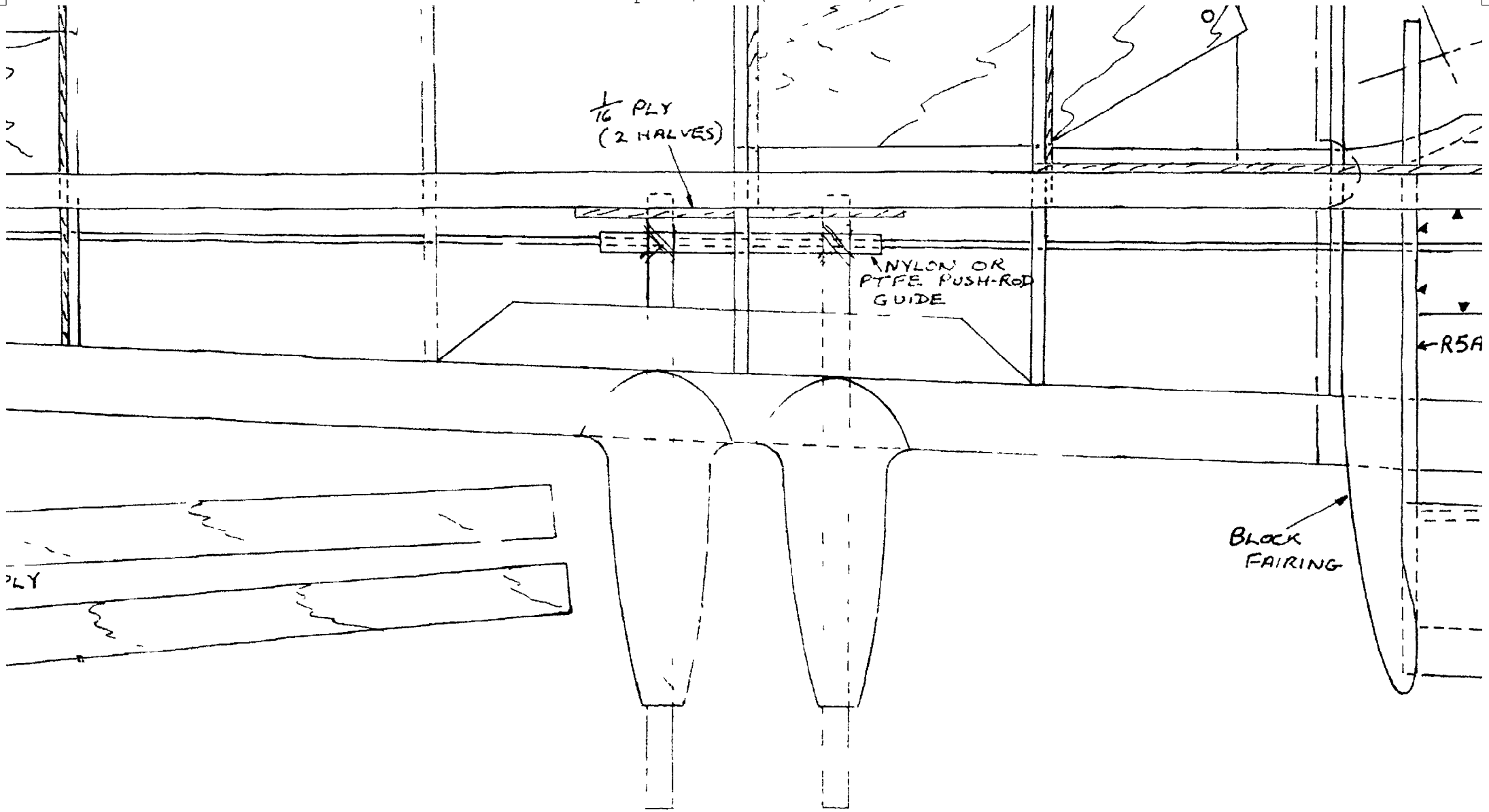
1/16 PLY
(2 HALVES)
NYLON OR
PTFE PUSH-ROD
GUIDE
R5A
BLOCK
FAIRING
PLY

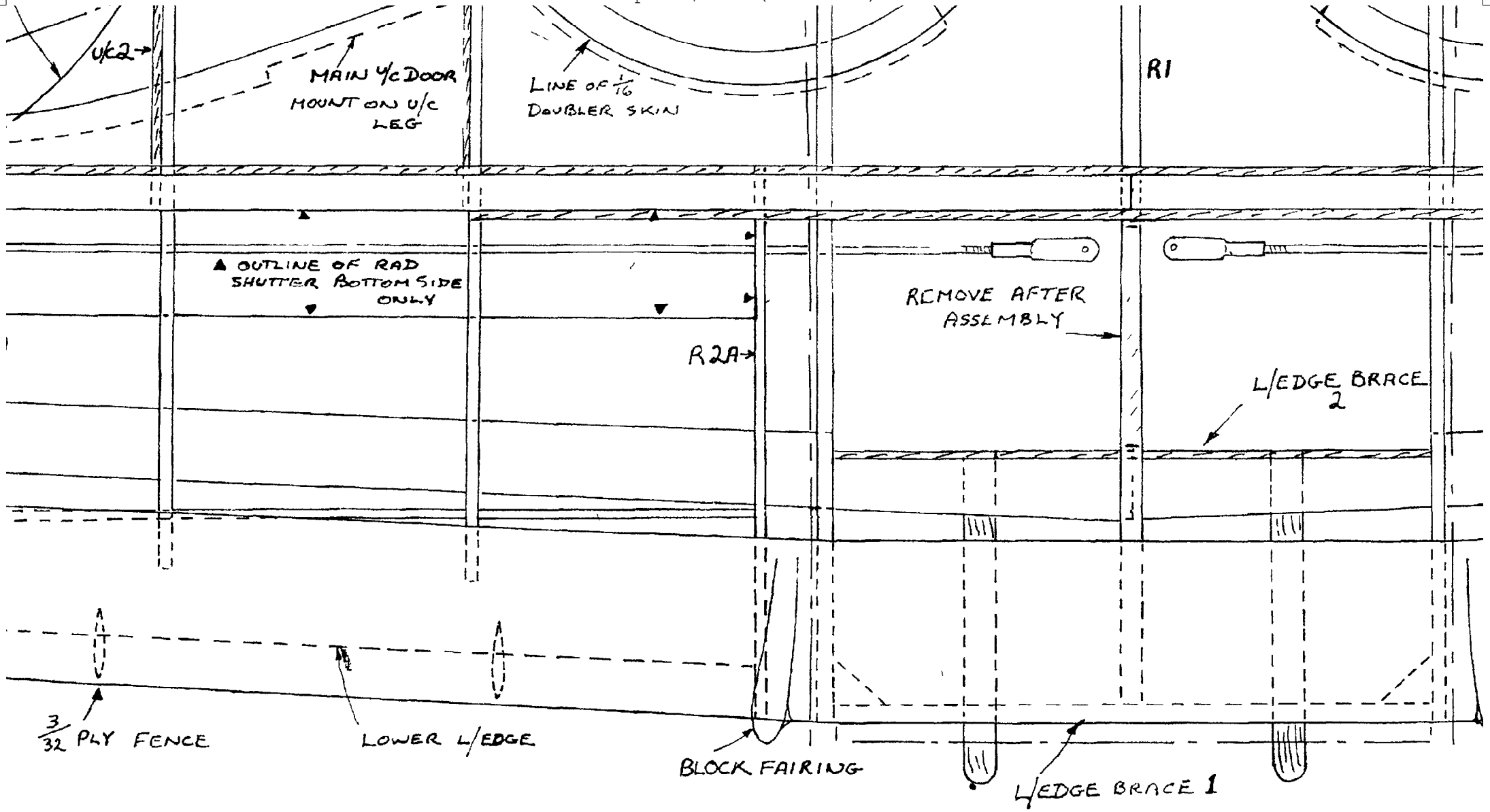
U/C2
MAIN U/C DOOR
MOUNT ON U/C
LEG
LINE OF 1/16
DOUBLER SKIN
R1
OUTLINE OF RAD
SHUTTER BOTTOM SIDE
ONLY
REMOVE AFTER
ASSEMBLY
R2A
L/EDGE BRACE
2
3/32 PLY FENCE
LOWER L/EDGE
BLOCK FAIRING
L/EDGE BRACE 1

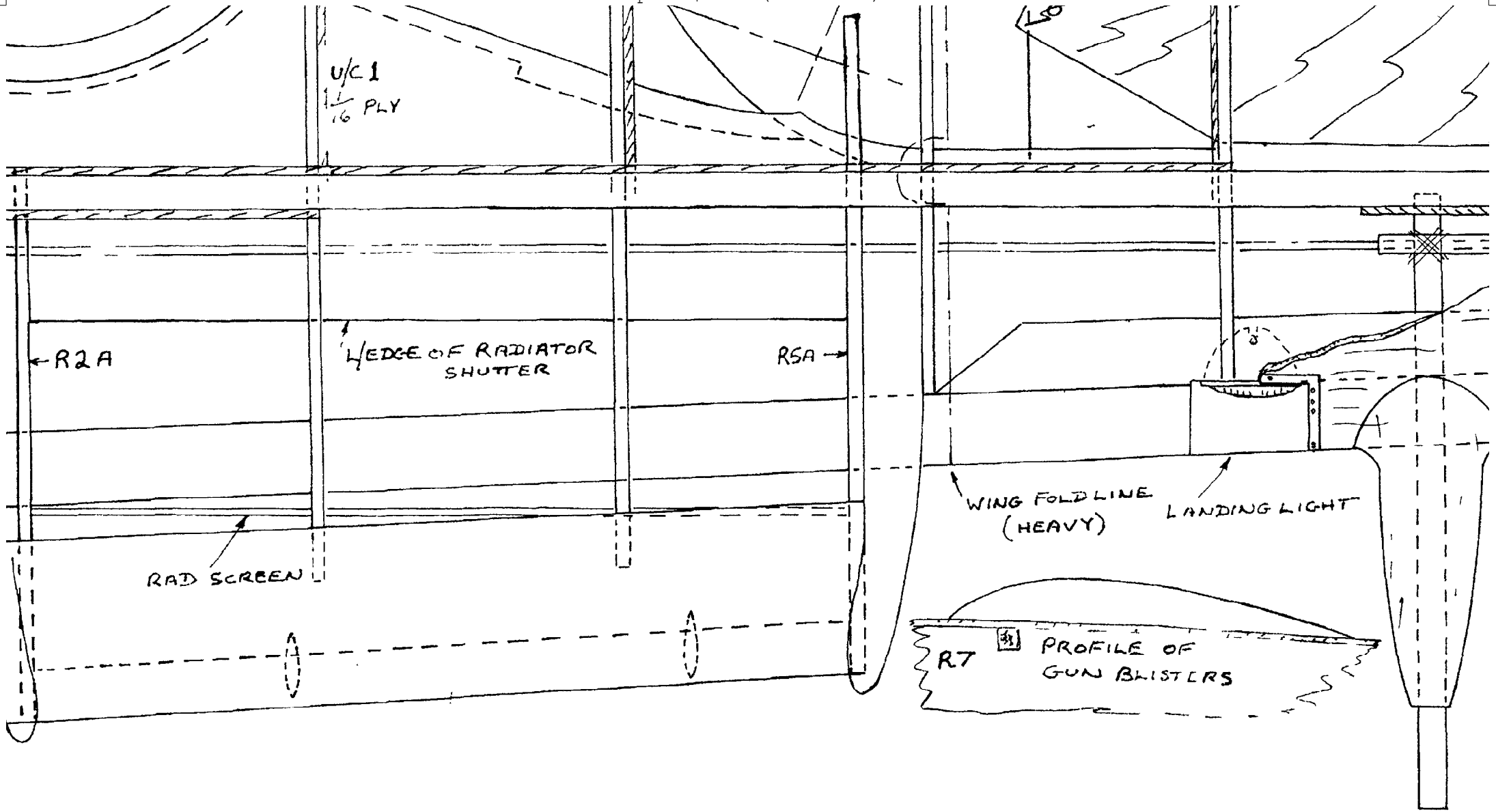
U/C 1
1/16 PLY
R2A
EDGE OF RADIATOR SHUTTER
R5A
WING FOLD LINE (HEAVY)
LANDING LIGHT
RAD SCREEN
R7
PROFILE OF GUN BLISTERS

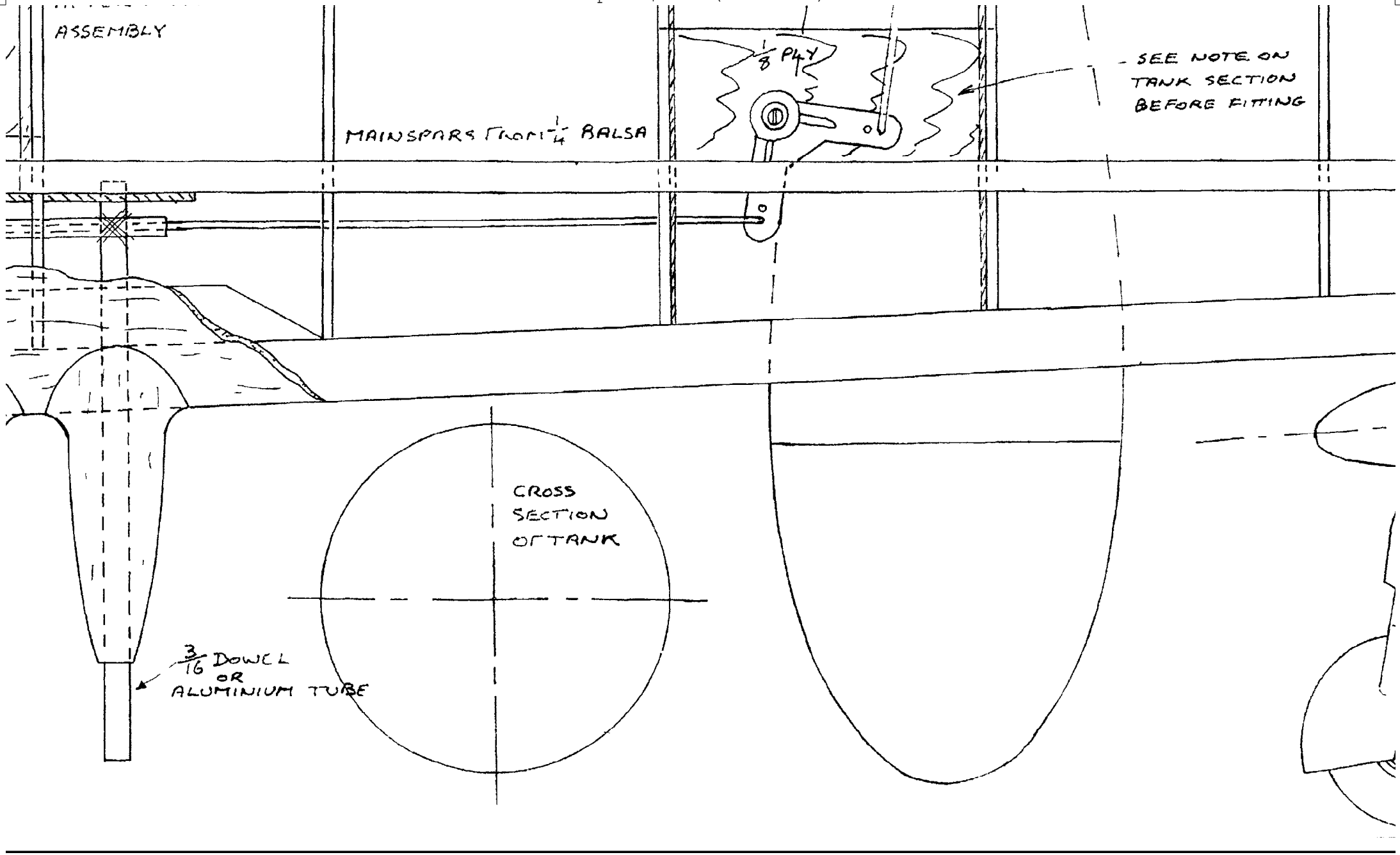
ASSEMBLY
1/8 PLY
SEE NOTE ON TANK SECTION BEFORE FITTING
MAINSPARS FROM 1/4 BALSA
CROSS SECTION OF TANK
3/16 DOWEL OR ALUMINIUM TUBE

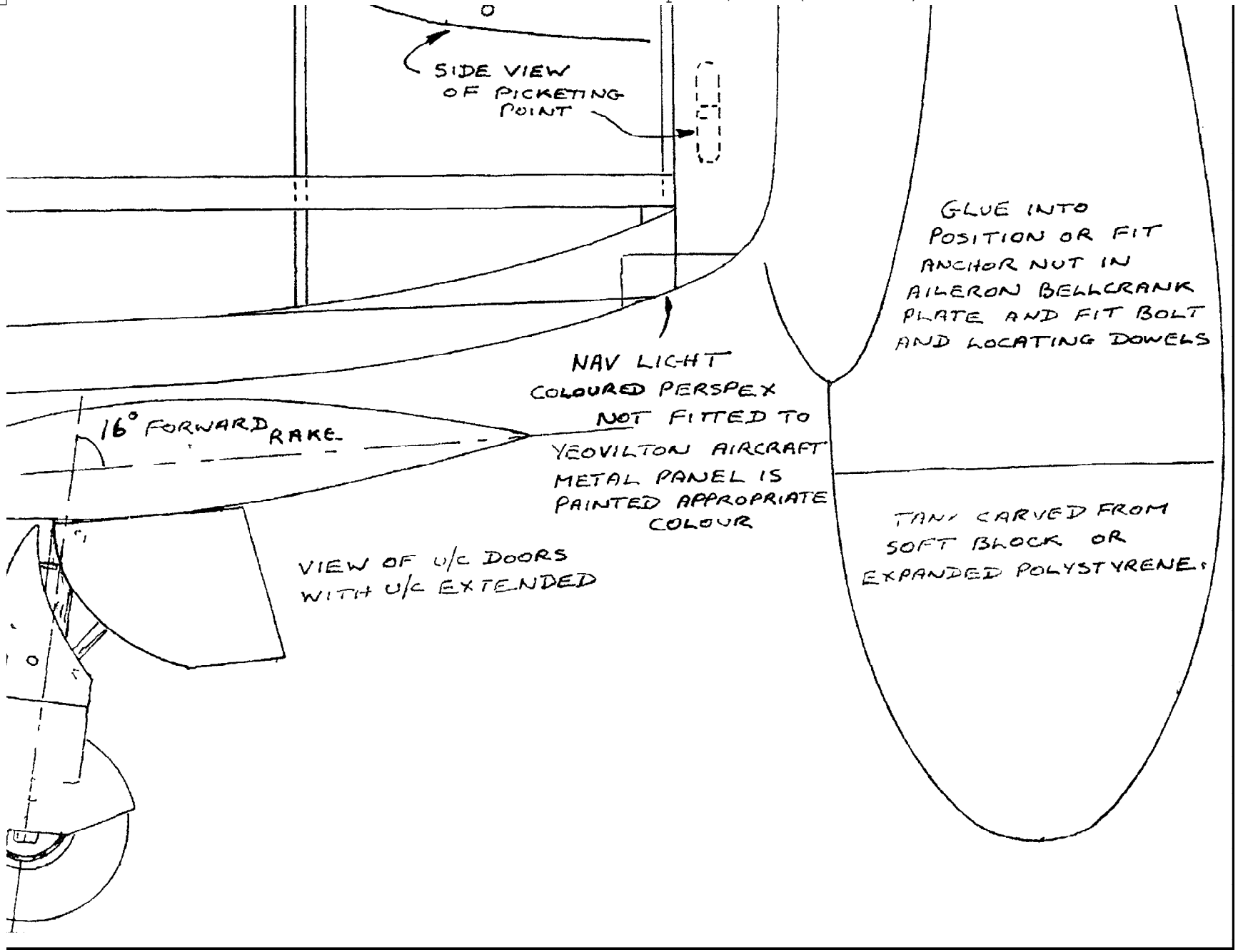
SIDE VIEW
OF PICKETING
POINT
GLUE INTO
POSITION OR FIT
ANCHOR NUT IN
AILERON BELLCRANK
PLATE AND FIT BOLT
AND LOCATING DOWELS
NAV LIGHT
COLOURED PERSPEX
NOT FITTED TO
YEOVILTON AIRCRAFT
METAL PANEL IS
PAINTED APPROPRIATE
COLOUR
16° FORWARD RAKE
TANK CARVED FROM
SOFT BLOCK OR
EXPANDED POLYSTYRENE.
VIEW OF U/C DOORS
WITH U/C EXTENDED