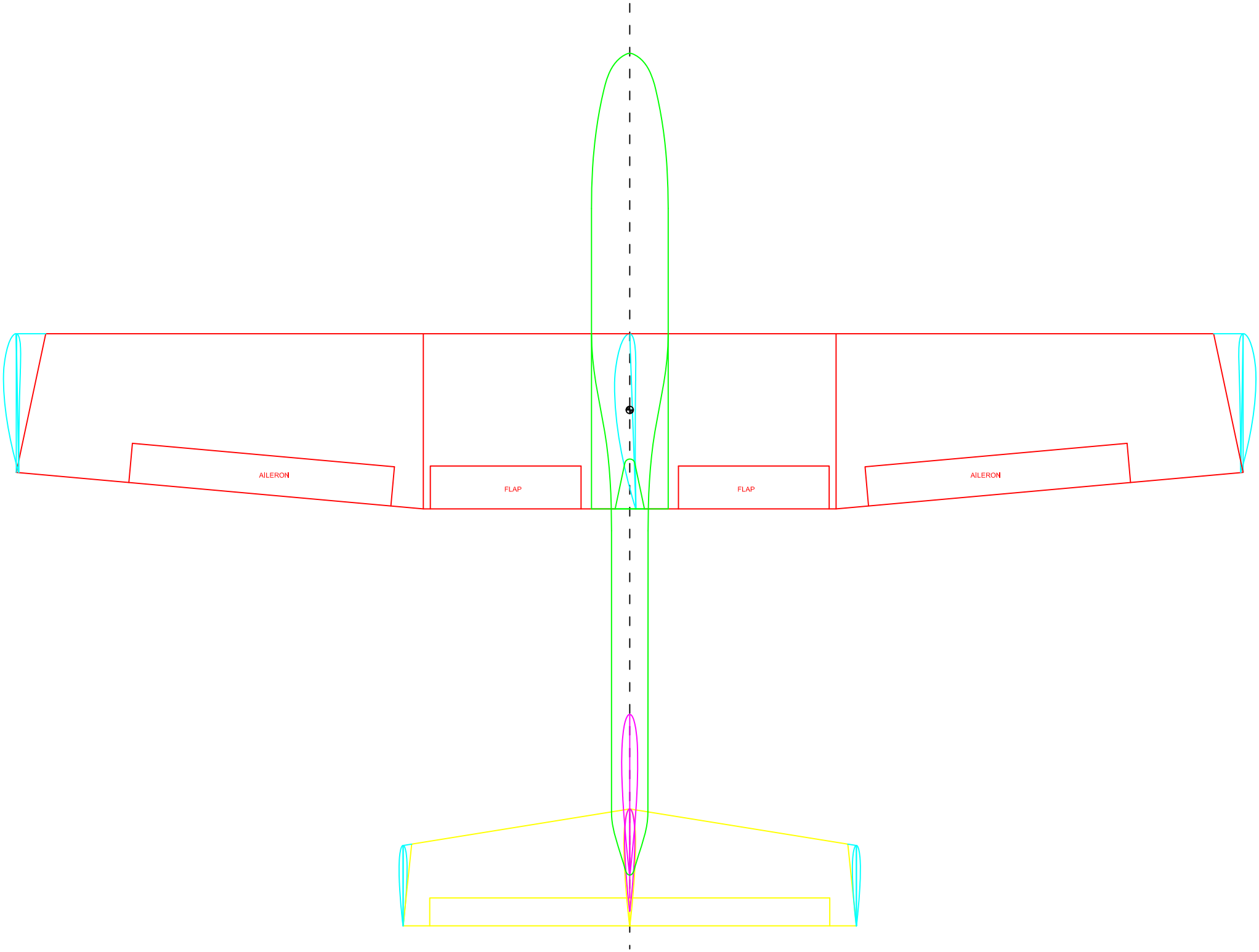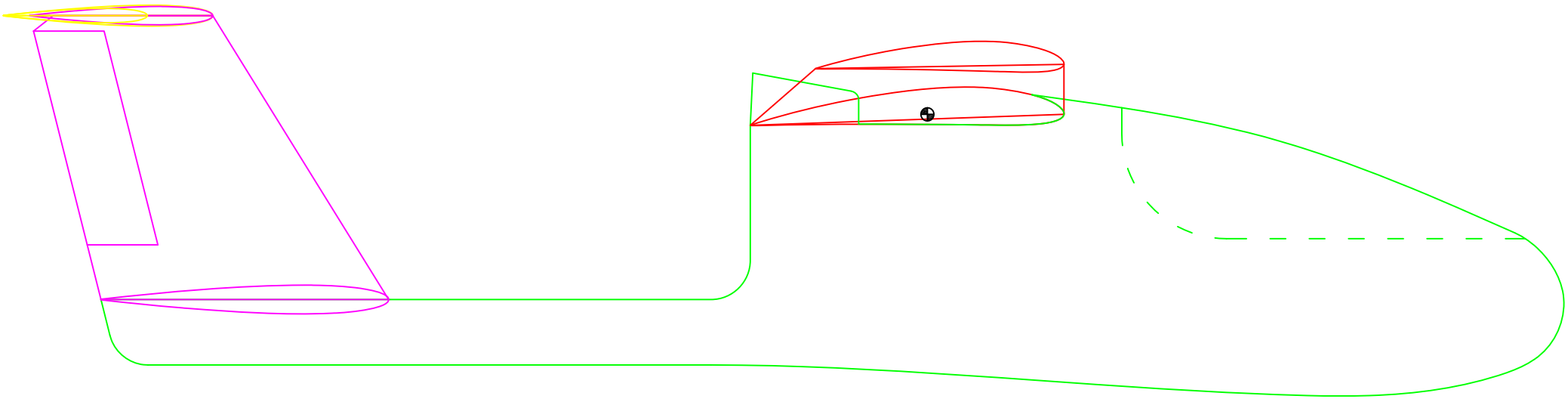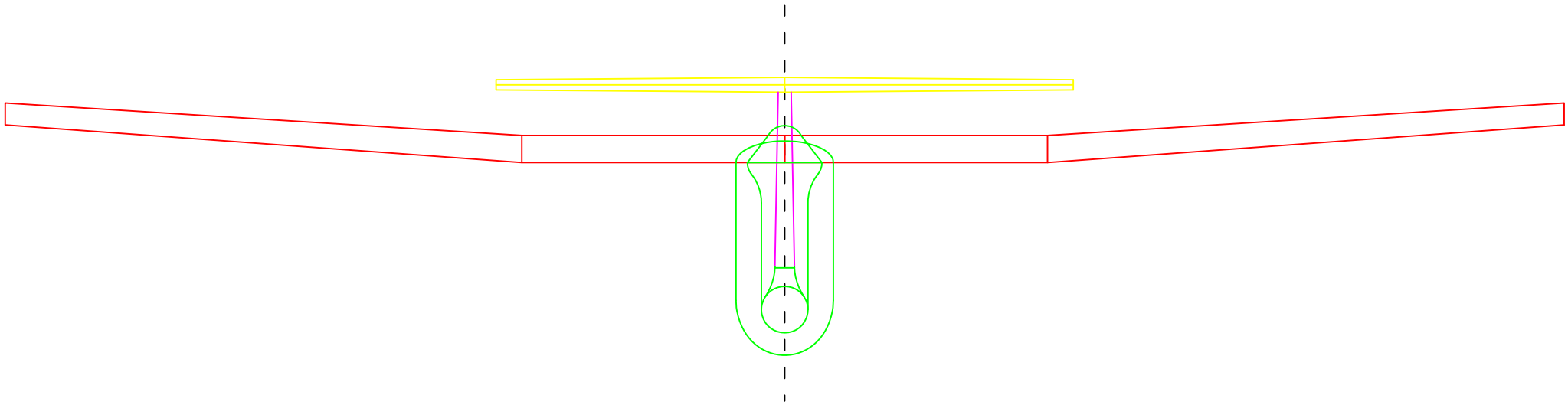
AILERON
FLAP
FLAP
AILERON